MDA
SPACE

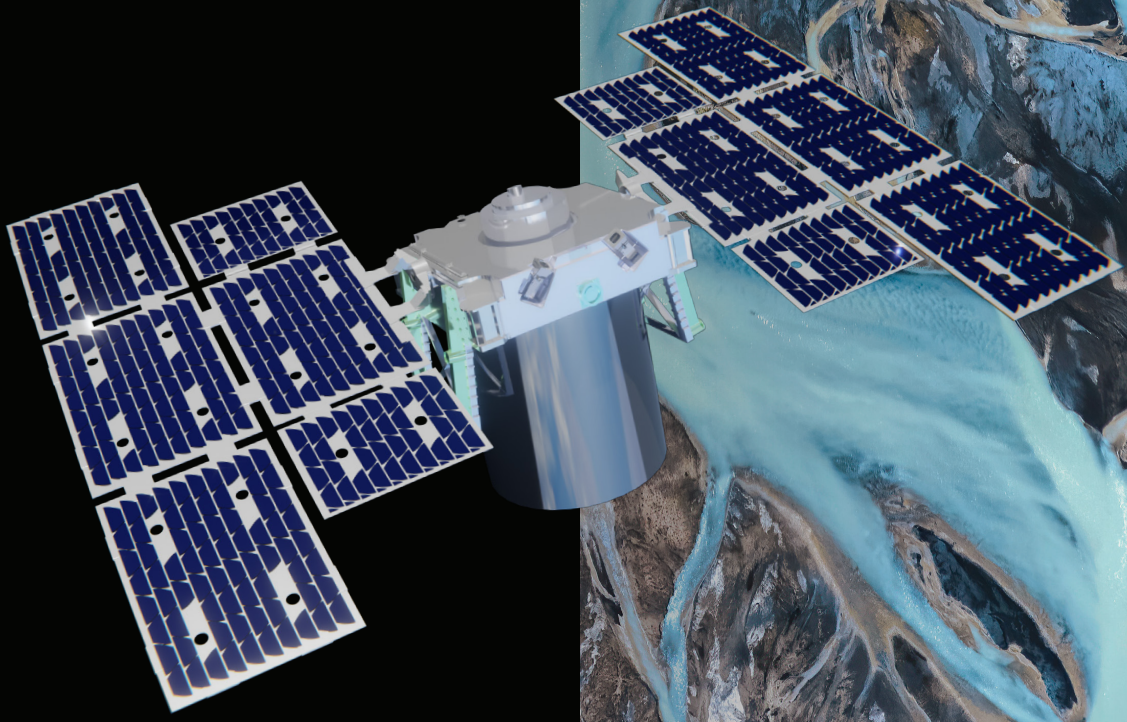

SPACECRAFT BUSES,
SYSTEMS & SOLUTIONS

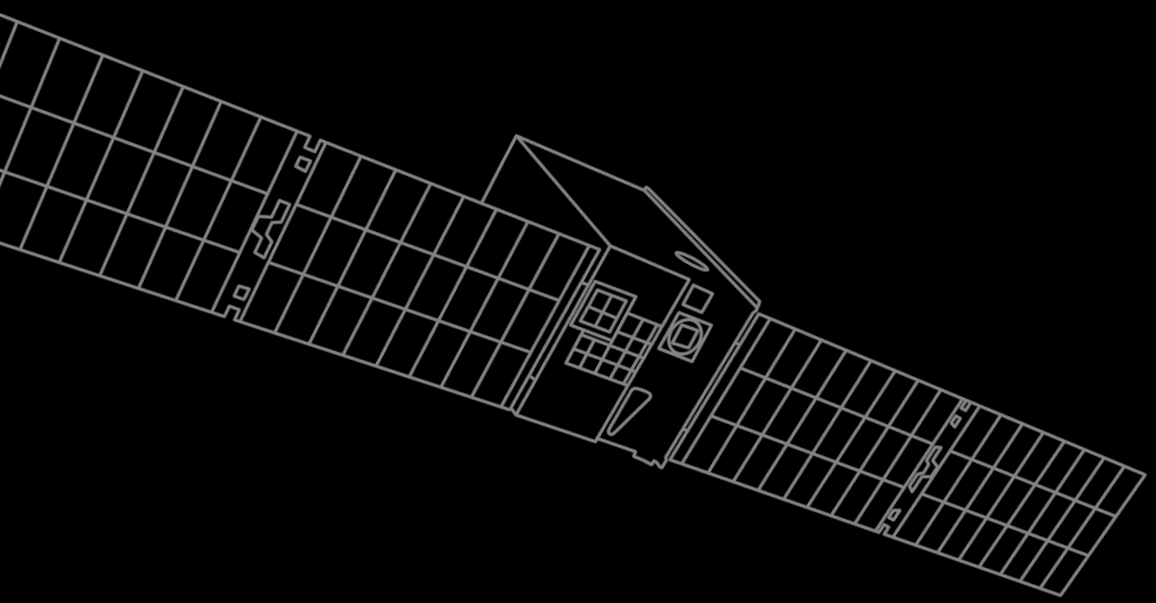

SPACE AWAITS

Reliable. High performance. Flight proven.

We are an end-to-end spacecraft manufacturer and leading provider of turnkey small satellite solutions. As a dedicated mission partner, we deliver innovative hardware, software and systems engineering solutions to meet the toughest challenges in space.

CONTENTS

04 Who We Are
08 Our Missions
16 Spacecraft Solutions
28 Subsystem Solutions
38 Components
56 Integration & Test
62 Mission Operations



WHO WE ARE

We are a leading small satellite manufacturer and mission services provider, delivering reliable, high-performance, flight-proven spacecraft solutions. Our portfolio includes turnkey spacecraft buses, modular subsystems, precision components and mission services supporting civil, commercial and national security missions.

With extensive on-orbit heritage and industry-leading guidance, navigation and control capabilities, we enable the precision pointing, low-jitter stability and agility required for demanding missions. From Earth observation and scientific exploration to space domain awareness and national defense, our proven technologies deliver exceptional performance and reliability across diverse mission applications.

With more than 140,000 square feet of U.S.-based advanced manufacturing, integration and testing facilities, we combine vertically integrated production with innovative hardware, software and systems engineering to solve complex challenges in space.

Our standardized, configurable spacecraft platforms and automated mission operations help customers accelerate development, reduce risk and optimize performance. From manufacturing and integration to environmental testing and on-orbit operations, we deliver end-to-end capabilities that maximize mission value.



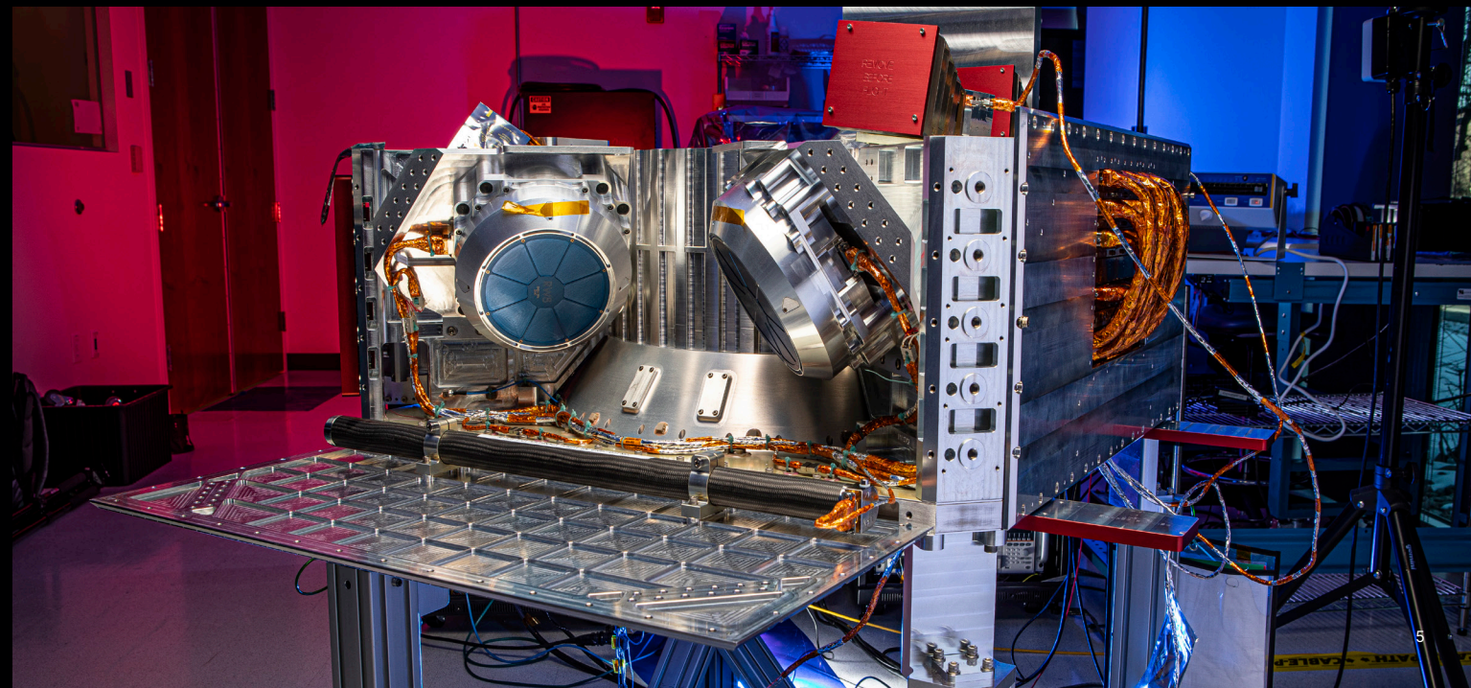

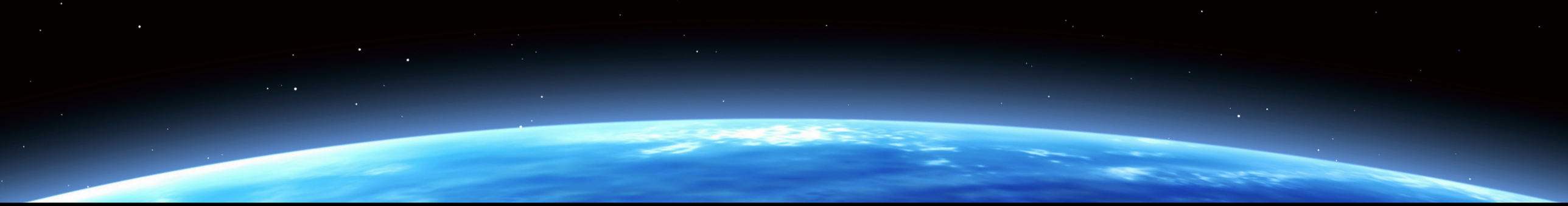

TECHNICAL CAPABILITIES

We are widely recognized for demonstrating world-class technical performance on small, cost-constrained and high-volume systems. This reputation is rooted in a wide variety of mission and product type successes, including:

- Arcsecond-class on-orbit pointing systems across our suite of small satellites
- On-orbit operations in VLEO, LEO, GEO, Lunar and deep space missions, including attitude control systems on the first interplanetary CubeSats
- An impressive flight heritage of more than 200 years on-orbit for spacecraft, more than 410 years for avionics assemblies and nearly 4,200 years for components
- Mission successes span optical imaging, commercial SAR, exploration astronomy, autonomous formation flying, weather observation, communications, defense applications and more
- More than half of the American Institute of Aeronautics and Astronautics (AIAA) Small Satellite Missions of the Year award winners leveraged our hardware in the last decade

We successfully optimize low-cost and short-schedule missions by bringing decades of combined smallsat and traditional space experience to every spacecraft subsystem and program phase.

This expertise is reflected in the design and performance of our hardware. Our core spacecraft components provide best-in-class performance to cost ratios.

Specifically, our reaction wheels (in all sizes) support exquisite optical missions, our arcsecond-class star trackers meet demanding requirements for astronomy and other missions and our turnkey guidance, navigation and control systems provide industry-leading smallsat pointing accuracy, geolocation, propulsion control and other capabilities.

In addition, our control moment gyroscopes enable a disruptive leap in spacecraft agility and data collection capacity, meeting stringent control and stability requirements at unprecedented smallsat SWaP-C.

Our suite of bus platforms support a variety of mission types in dynamic environments, with successful missions in VLEO, LEO, GEO and cislunar space. Leveraging our vertically-integrated portfolio, our spacecraft provide leading on-orbit performance at low cost, and our small satellites have been especially successful at controlling large deployable payloads, hosting and guiding novel thruster systems, integrating payload and bus control autonomous logic and supporting other cutting-edge technologies.

We minimize bus SWaP-C to maximize payload capabilities and, when desired, customer-provided software autonomy applications can “fly” buses under the supervision of our flexible and powerful autonomous bus fault protection.

Since our first hardware flight in 2015, generational enhancements to our product portfolio have provided increased performance. Most of our products are now in their third or fourth generation, advancing in technical performance, radiation tolerance, manufacturability and overall capability with each iteration. Further advances both incremental and disruptive are on the horizon and drive our expectation that our technical solutions will continue to expand the limits of what’s possible.

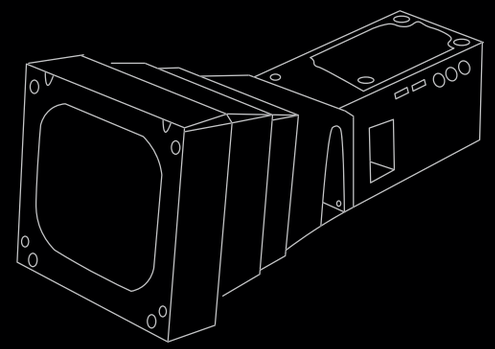

OUR MISSIONS

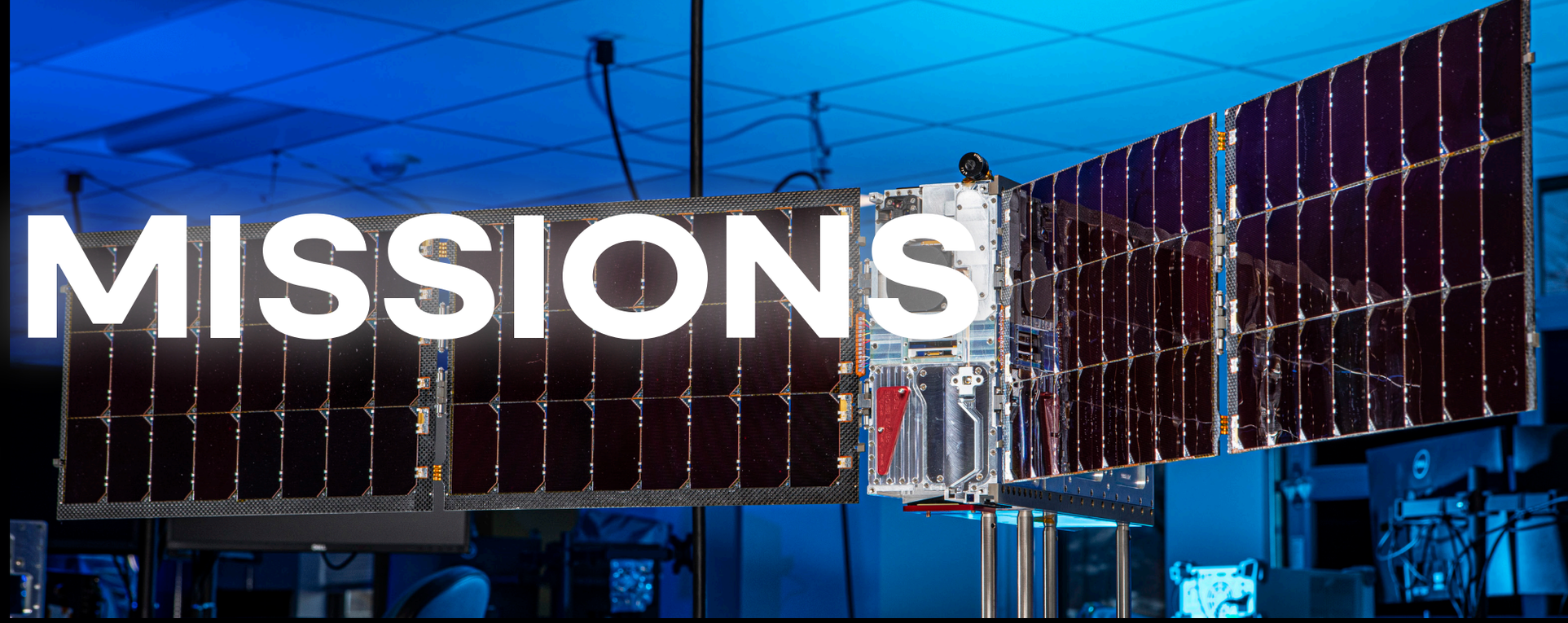

With reliable, high-performing and flight-proven turnkey spacecraft products and solutions, we continue to meet the needs of commercial, civil and defense customers. To show you just what we're capable of, we've included a small sample of our spacecraft missions:

CUBESATS

AGILE MICROSATELLITE (AMS)
MIT Lincoln Laboratory

- **Objective:** First-of-its-kind mission that demonstrated a CubeSat can positively control attitude in very low Earth orbit
- **Provided:** XB6 CubeSat bus, mission operations

ARCSTONE
NASA Langley Research Center

- **Objective:** Provide accurate measurements of lunar spectral reflectance to significantly improve lunar calibrations standard
- **Provided:** XB6 CubeSat bus, system integration and test, spacecraft operations

ASCENT
Air Force Research Laboratory

- **Objective:** Successfully demonstrated mission of a small satellite in Geostationary orbit
- **Provided:** XB12 CubeSat bus

ASTERIA (Arcsecond Space Telescope Enabling Research in Astrophysics)
NASA's Jet Propulsion Laboratory

- **Objective:** Enabled precision astrophysical measurements via extremely accurate payload pointing
- **Provided:** XACT-15 attitude determination and control system

CAT
Johns Hopkins Applied Physics Laboratory

- **Objective:** Demonstrated sponsor payload performance in CubeSats flying in formation using differential drag to maintain spacing
- **Provided:** Two XB3 CubeSat buses

CIRCE
US Naval Research Laboratory and Defence Science and Technology Laboratory UK

- **Objective:** CubeSats flying in tandem formation in low-Earth orbit to measure the ionosphere and radiation environment space from multiple vantage points
- **Provided:** Two XB6 CubeSat buses, mission operations

CIRBE (Colorado Inner Radiation Belt Experiment)
CU Boulder Laboratory for Atmospheric and Space Physics

- **Objective:** Observed the formation of the inner radiation belt electrons and determine where the particles come from and how they behave
- **Provided:** XB3 CubeSat bus

CLICK A (CubeSat Laser Infrared Crosslink)
MIT | NASA Ames Research Center

- **Objective:** Successfully demonstrated technological advancements in optical communication, pointing in particular
- **Provided:** XB3 CubeSat bus, mission operations support

CLICK B / C
MIT | NASA Ames Research Center

- **Objective:** Conduct a demonstration of full-duplex optical communication crosslink with small spacecraft, plus the capability to gauge their relative distance and location in low Earth orbit
- **Provided:** Two XB3 CubeSat buses, mission operations support

CUTE (Colorado Ultraviolet Transit Experiment)
CU Boulder Laboratory for Atmospheric and Space Physics

- **Objective:** Observed distant exoplanets by traveling in front of their stars and determined some materials in the atmospheres
- **Provided:** XB6 CubeSat bus

EZIE (Electrojet Zeeman Imaging Explorer)
Johns Hopkins Applied Physics Laboratory (APL)

- **Objective:** Image the magnetic fingerprint of the auroral electrojets using Microwave Electrojet Magnetogram (MEM) instruments
- **Provided:** Constellation of three XB6 CubeSat buses, mission operations

HALOSAT
University of Iowa | NASA Wallops Flight Facility

- **Objective:** Successfully measured soft X-ray emissions from the halo of our Milky Way galaxy
- **Provided:** XB6 CubeSat bus, mission operations

PREFIRE
NASA Jet Propulsion Laboratory

- **Objective:** Seeks to reduce uncertainty in polar energy fluxes, the processes that influence them, and, with improved modeling, the societal implications of polar climate change
- **Provided:** Two XB6 CubeSat buses

PolSIR (Polarized Submillimeter Ice-cloud Radiometer)
Vanderbilt University | NASA Goddard Space Flight Center

- **Objective:** Understand Earth's dynamic atmosphere and its impact on climate by studying ice clouds that form at high altitudes throughout tropical and sub-tropical regions
- **Provided:** Payload spin mechanism, two XB16 CubeSat buses, mission operations

RAVAN
Johns Hopkins University Applied Physics Laboratory

- **Objective:** Successfully demonstrated a radiometer and vertically aligned carbon nanotubes and paved the way for constellation Earth radiation budget mission
- **Provided:** XB3 CubeSat bus, mission operations

SLINGSHOT
The Aerospace Corporation

- **Objective:** 12U bus carrying 19 payloads to low-Earth orbit. Mission demonstrated the accessibility of integrating numerous payloads into a single interface
- **Provided:** XB12 CubeSat bus, mission operations

SPARCS (Star-Planet Activity Research CubeSat)
Arizona State University

- **Objective:** Monitor the flares and sunspot activity of low-mass stars in the far- and near-ultraviolet to assess space environments of orbiting planets
- **Provided:** XB6 CubeSat bus

STARLING
NASA Ames Research Center

- **Objective:** Successful demonstration mission proving the capability of affordable, autonomous, distributed spacecraft missions, or swarms, in low-Earth orbit
- **Provided:** Constellation of four XB6 CubeSat buses, mission operations

TEMPEST-D
Colorado State University

- **Objective:** Demonstrated radiometer that will provide temporal observations of cloud and precipitation process in a future constellation
- **Provided:** XB6 CubeSat bus, mission operations

TROPICS NASA CUBESAT CONSTELLATION
MIT Lincoln Laboratory

- **Objective:** Provided rapid-revisit passive microwave measurements over low-latitude tropical regions
- **Provided:** Constellation of seven XB3 CubeSat buses, mission operations

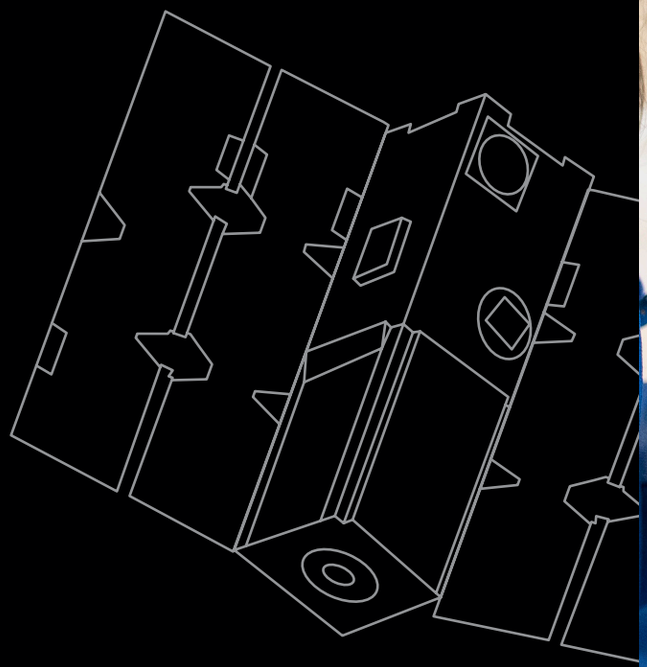



MICROSATELLITES & MINISATELLITES

BLACKJACK
Defense Advanced Research Projects Agency (DARPA)

- **Objective:** Demonstrate global persistent coverage through operation of one or more payloads from up to six Department of Defense mission areas in low-Earth orbit
- **Provided:** Constellation of four Saturn-200 buses

INCUS
Colorado State University and Jet Propulsion Laboratory

- **Objective:** Provide the first tropics-wide investigation of the evolution of the vertical transport of air and water by convective storms
- **Provided:** Constellation of three Venus-100 buses, system integration and test, mission operations

METHANESAT
MethaneSAT, LLC

- **Objective:** Provided global, high-resolution quantification of methane emissions from oil and gas facilities and measure surface-level methane emissions from other sources of human-triggered methane emissions
- **Provided:** Saturn-200 bus

ORACLE-M
Air Force Research Laboratory

- **Objective:** Demonstrate extraordinary mobility between orbital regimes in a small spacecraft with a useful space domain awareness payload
- **Provided:** Custom ESPA-Grande bus

PAMI-1
Netherlands Ministry of Economic Affairs and Climate

- **Objective:** Support the Netherlands Armed Forces
- **Provided:** Saturn-200 bus

PANDORA
NASA Goddard Space Flight Center and Lawrence Livermore National Laboratory

- **Objective:** Study the atmospheres of exoplanets using transmission spectroscopy
- **Provided:** Saturn-200 bus, system integration and test

R3D2
DARPA and Northrop Grumman

- **Objective:** To space-qualify a new type of Kapton membrane reflect array antenna
- **Provided:** Venus-100 bus

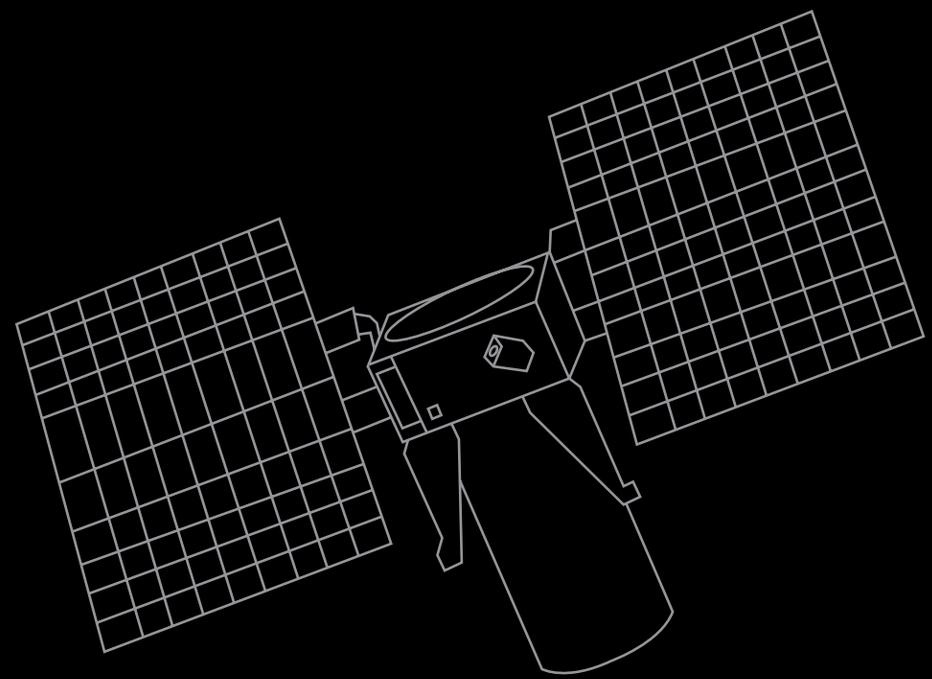

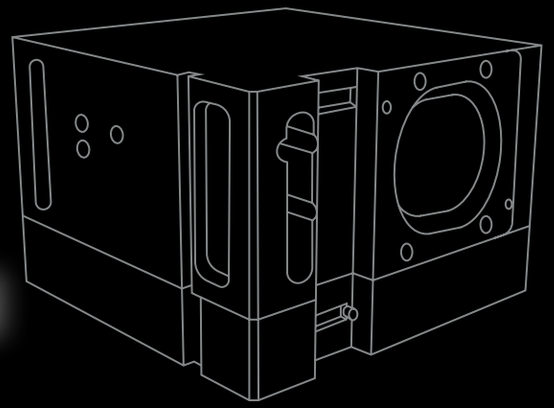

TO THE MOON & BEYOND

Our heritage includes on-orbit operations in VLEO, LEO, GEO, lunar and deep space missions, including attitude control systems on the first interplanetary CubeSats.

In 2022, we provided XACT attitude control systems and XB1 avionics solutions on eight of the 10 CubeSats that were secondary payloads to the NASA Artemis I mission. After the conclusion of the Apollo program more than 50 years ago, we're proud to have been part of the return to lunar exploration.

Some of the missions that demonstrate our Lunar, deep space and interplanetary capabilities include:

MarCO
NASA JPL

Destination: Mars
Objective: Accomplished a successful mission that demonstrated miniature spacecraft technology in deep space
Provided: XACT-15

LICIACube
Argotec | Italian Space Agency

Destination: Asteroid Dimorphos
Objective: Capture imagery of the intentional collision of DART with its target asteroid
Provided: XACT-50

ARTEMIS I MISSIONS

ARGOMOON
Argotec

Destination: Earth
Objective: Took historically significant photography of the Artemis I mission
Provided: XACT-15

BIOSENTINEL
NASA Ames Research Center

Destination: Heliocentric
Objective: Detected, measured and correlated the impact of space radiation in living organisms
Provided: XACT-15

EQUULEUS
University of Tokyo / JAXA

Destination: Sun-Earth Lagrange Point 2 (L2)
Objective: Trajectory control experiment in cis-lunar region, imaging of Earth's plasmasphere, lunar impact flash observation, measurement of dust environment in cislunar region
Provided: XACT-15

LunaH-MAP
Arizona State University

Destination: Lunar orbit
Objective: Mapped hydrogen around the Lunar South Pole
Provided: XB1 Avionics

LUNAR FLASHLIGHT
NASA JPL

Destination: Lunar Orbit
Objective: Mapping for volatiles
Provided: XACT-50, solar array

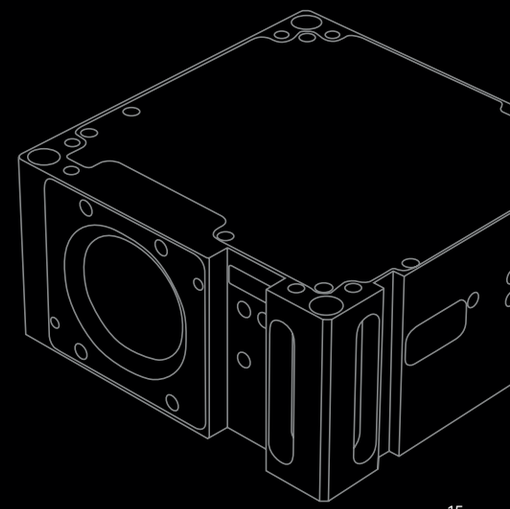

SPACECRAFT SOLUTIONS

We offer a comprehensive portfolio of flight-proven, high-performance spacecraft platforms designed to meet the evolving needs of the small satellite industry.

Built for demanding missions, our spacecraft integrate advanced guidance, navigation and control capabilities, autonomous operations, secure communications and flexible payload accommodations. Industry-leading star trackers and low-jitter reaction wheels and sophisticated control algorithms deliver the precision pointing, stability and agility required to maximize mission performance.

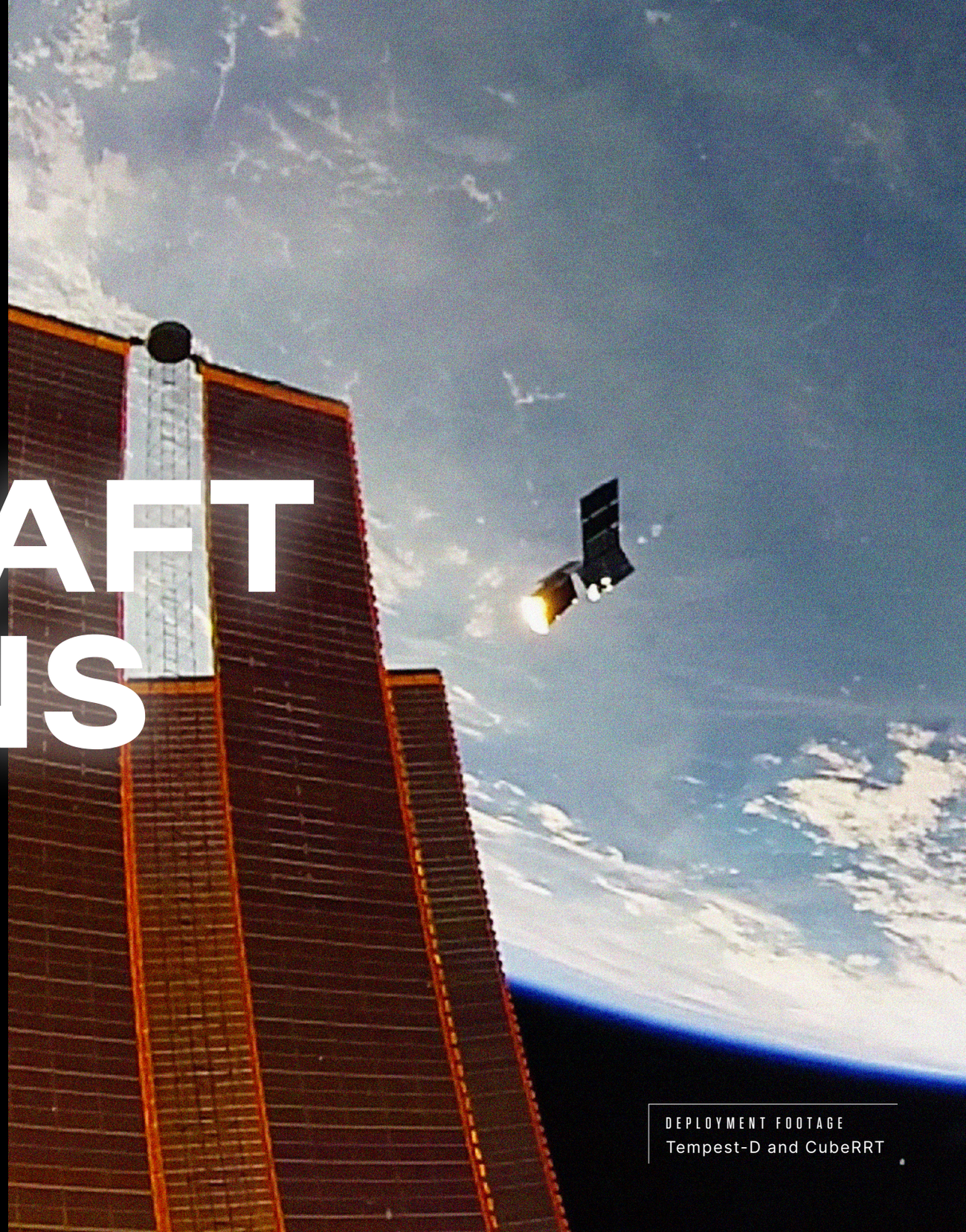

DEPLOYMENT FOOTAGE
Tempest-D and CubeRRT



XB3 SPACECRAFT



CLASS
3U

POINTING ACCURACY
< 5 arcsec (1-sigma), 2 axes; < 14 arcsec, 3rd axis, 1 star tracker
< 5 arcsec (1-sigma), all axes; 2 star tracker (option)

SOLAR ARRAY POWER
27 W

AVAILABLE PAYLOAD VOLUME
1.5U (typical)

ENERGY STORAGE
6.8 Ah

ORBIT ALTITUDE / ORBIT LIFETIME
LEO > 5 years | GEO/Lunar/Deep Space > 2 years

XB6 SPACECRAFT

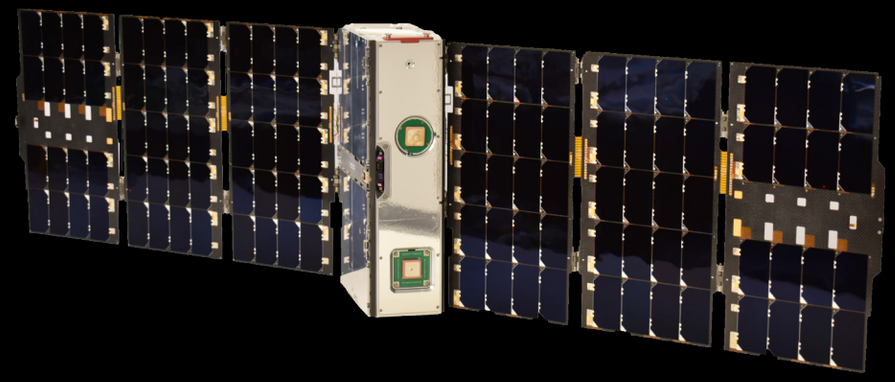

CLASS
6U

POINTING ACCURACY
< 5 arcsec (1-sigma), 2 axes; < 14 arcsec, 3rd axis, 1 star tracker
< 5 arcsec (1-sigma), all axes; 2 star tracker (option)

SOLAR ARRAY POWER
92 W - 108 W

AVAILABLE PAYLOAD VOLUME
4U (typical)

ENERGY STORAGE
6.8-20.4 Ah

ORBIT ALTITUDE / ORBIT LIFETIME
LEO > 5 years | GEO/Lunar/Deep Space > 2 years

XB12 SPACECRAFT



CLASS
12U

POINTING ACCURACY
< 5 arcsec (1-sigma), 2 axes; < 14 arcsec, 3rd axis, 1 star tracker
< 5 arcsec (1-sigma), all axes; 2 star tracker (option)

SOLAR ARRAY POWER
92 W - 108 W

AVAILABLE PAYLOAD VOLUME
8U (typical)

ENERGY STORAGE
6.8-20.4 Ah

ORBIT ALTITUDE / ORBIT LIFETIME
LEO > 5 years | GEO/Lunar/Deep Space > 2 years

XB16 SPACECRAFT

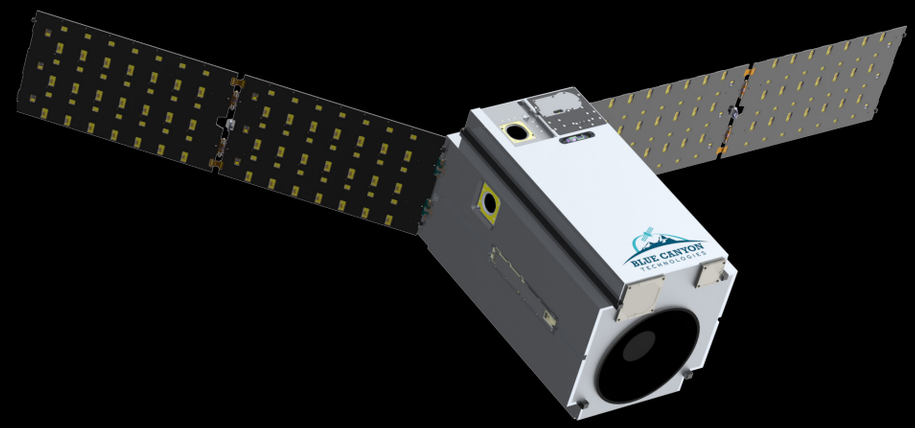

CLASS
16U

POINTING ACCURACY
< 5 arcsec (1-sigma), 2 axes; < 14 arcsec, 3rd axis, 1 star tracker
< 5 arcsec (1-sigma), all axes; 2 star tracker (option)

SOLAR ARRAY POWER
92 W - 108 W

AVAILABLE PAYLOAD VOLUME
12U (typical)

ENERGY STORAGE
6.8-20.4 Ah

ORBIT ALTITUDE / ORBIT LIFETIME
LEO > 5 years | GEO/Lunar/Deep Space > 2 years

CUBESAT SUMMARY


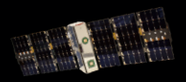
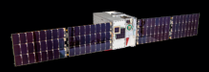
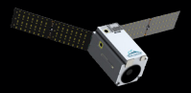

	XB3	XB6	XB12	XB16
CLASS	3U	6U	12U	16U
AVAILABLE PAYLOAD VOLUME	1.5U (typical)	4U (typical)	8U (typical)	12U (typical)
POINTING ACCURACY	< 5 arcsec (1-sigma), 2 axes; < 14 arcsec, 3rd axis, 1 star tracker < 5 arcsec (1-sigma), all axes; 2 star tracker (option)			
POINTING STABILITY	< 1 arcsec over 1 sec (1-sigma),per axis			
AGILITY	> 10 deg/sec	> 6 deg/sec	> 5 deg/sec	> 3 deg/sec
ORBIT KNOWLEDGE	L1: Position < 6 m, Velocity < 0.1 m/s (1-sigma) per axis L1/L2: Position < 3 m, Velocity < 0.1 m/s (1-sigma) per axis			
DATA INTERFACES	UART (Configurable Baud Rate over Single-Ended 3.3V, LVDS, RS-422, or RS-485), SpaceWire (Configurable Link Rate over LVDS), GPIO (Configurable direction, Single-Ended 3.3V or LVDS), Pulse Per Second (Single-Ended 3.3V or LVDS)			
ONBOARD DATA STORAGE	4GB with expandable beyond for the 6U, 12U and 16U (by adding the high speed data recorder)			
ENERGY STORAGE	6.8 Ah	6.8 – 20.4 Ah	6.8 – 20.4 Ah	6.8 – 20.4 Ah
SOLAR ARRAY POWER	27 W	92 W - 108 W	92 W - 108 W	92 W - 108 W
PROPULSION	Multiple electric and chemical propulsion systems available			
PAYLOAD POWER	3.3 V, 5.0 V, 12 V, 28 V (available in 6U, 12U, 16U)			
LEO UPLINK	Nominal 100 Kbps, CCSDS formatting			
LEO DOWNLINK	S-Band 2 Mbps standard	S-Band 2 Mbps standard X-Band up to 10 Mbps	S-Band 2 Mbps standard X-Band up to 10 Mbps	S-Band 2 Mbps standard X-Band up to 10 Mbps
ORBIT ALTITUDE / ORBIT LIFETIME	LEO > 5 years | GEO/Lunar/Deep Space > 2 years			

Note: This data is for information only and subject to change. Please contact us for current design data.

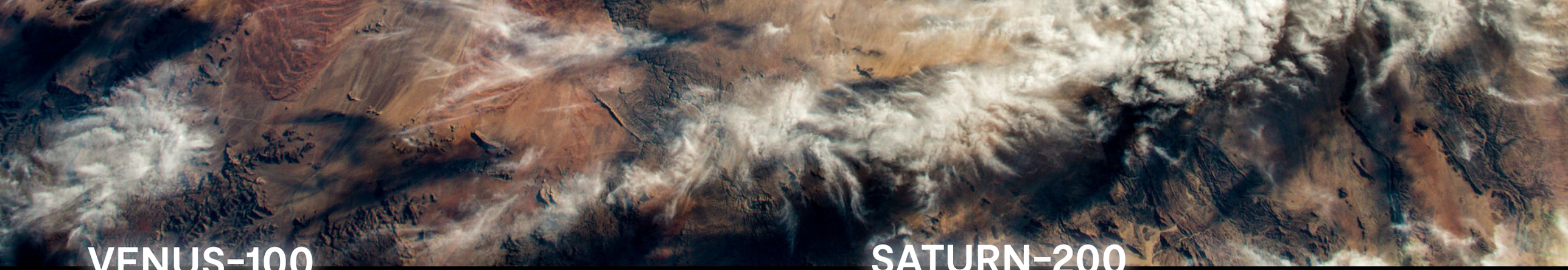

VENUS-100

MICROSATELLITE

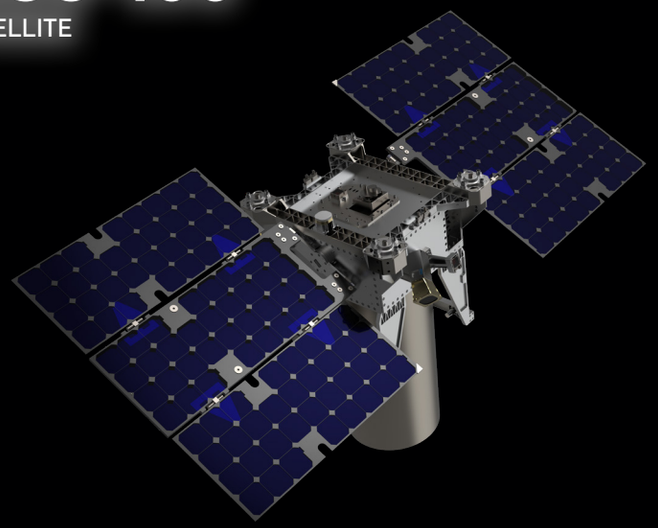

CLASS
ESPA-Standard or larger
15” launch vehicle interface, 4-point interface available

POINTING ACCURACY
< 5 arcsec (1-sigma), per axis

SOLAR ARRAY POWER (BOL)
Two wing: 444 W
One wing: 222 W

PAYLOAD MASS CAPABILITY
70 kg

ENERGY STORAGE
13.6 Ah

ORBIT ALTITUDE / ORBIT LIFETIME
LEO (> 5 years), GEO (> 2 years), Deep Space (> 2 years)

PAYLOAD VOLUME
17.0” X 16.4” X 27.0” (2 array)

Above stowed volumes keep payload within bus payload deck footprint and ESPA/G/Rideshare radial dimensions. Larger stowed volumes can be accommodated depending on launch vehicle configuration. Deployed volumes are CG and MOI dependent.

SATURN-200

MINISATELLITE

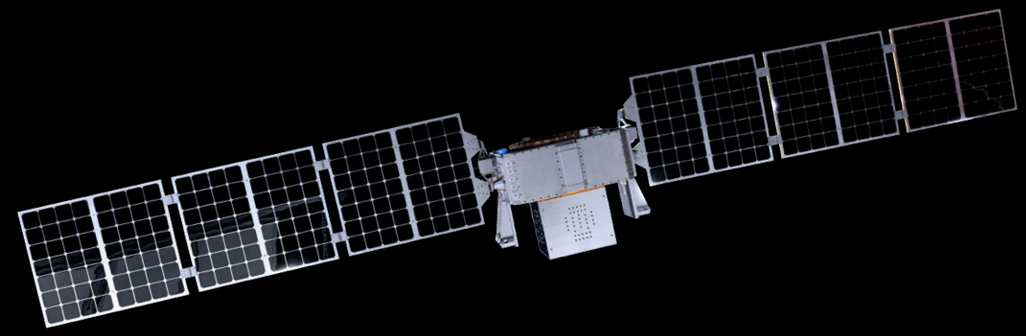

CLASS
ESPA-Grande or Equivalent
24” launch interface standard, other options available

POINTING ACCURACY
< 5 arcsec (1-sigma), per axis

SOLAR ARRAY POWER (BOL)
1082 W

PAYLOAD MASS CAPABILITY
Standard rideshare*: 200 kg
Specialty applications and options*: up to 350 kg
*CG and MOI dependent

ENERGY STORAGE
54.4 Ah

ORBIT ALTITUDE / ORBIT LIFETIME
LEO (> 7 years), GEO (> 5 years), Deep Space (> 5 years)

PAYLOAD VOLUME
30.0” X 30.0” X 40.0” (typical)

Above stowed volumes keep payload within bus payload deck footprint and ESPA/G/Rideshare radial dimensions. Larger stowed volumes can be accommodated depending on launch vehicle configuration. Deployed volumes are CG and MOI dependent.

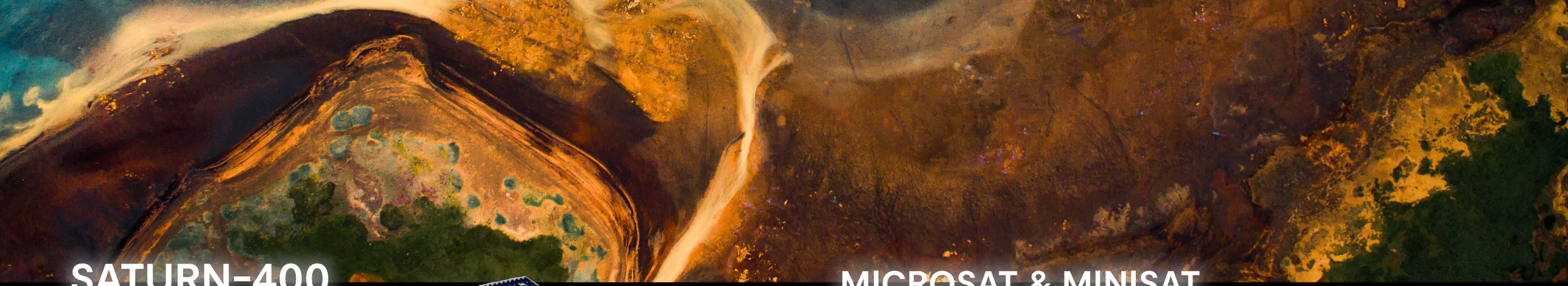

SATURN-400

SMALL SATELLITE



CLASS

Rideshare and NSSL compatible

POINTING ACCURACY

< 5 arcsec (1-sigma), per axis

SOLAR ARRAY POWER (BOL)

1876 W

PAYLOAD MASS CAPABILITY

Standard rideshare*: 250 kg (objective)
Specialty applications and options*: 600 kg (objective)
*CG and MOI dependent

ENERGY STORAGE

75 Ah

Options for increased energy storage available

ORBIT ALTITUDE / ORBIT LIFETIME

LEO (> 7 years), GEO (> 5 years),
Deep Space (> 5 years)

PAYLOAD VOLUME

40.0” x 40.0” x 45.0”

Above stowed volumes keep payload within bus payload deck footprint and ESPA/G/Rideshare radial dimensions. Larger stowed volumes can be accommodated depending on launch vehicle configuration. Deployed volumes are CG and MOI dependent.

MICROSAT & MINISAT SUMMARY



VENUS-100

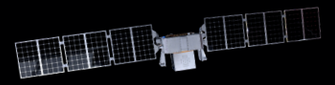

SATURN-200

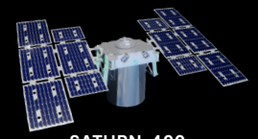

SATURN-400

	VENUS-100	SATURN-200	SATURN-400
CLASS	ESPA-Standard or larger 15” launch vehicle interface, 4-point interface available	ESPA-Grande or Equivalent 24” launch interface standard, other options available	Rideshare and NSSL compatible
POINTING ACCURACY		< 5 arcsec (1-sigma), per axis	
SOLAR ARRAY POWER (BOL)	One wing: 222 W Two wing: 444 W	1082 W	1876 W
PAYLOAD MASS CAPABILITY	70 kg	Standard rideshare*: 200 kg Specialty applications and options*: up to 350 kg *CG and MOI dependent	Standard rideshare*: 250 kg (objective) Specialty applications and options*: 600 kg (objective) *CG and MOI dependent
ENERGY STORAGE	13.6 Ah	54.4 Ah	75 Ah Options for increased energy storage available
ORBIT ALTITUDE / ORBIT LIFETIME	LEO (> 7 years), GEO (> 5 years), Deep Space (> 5 years)		
PAYLOAD VOLUME	17.0” X 16.4” X 27.0” (2 array)	30.0” X 30.0” X 40.0” (typical)	40.0” X 40.0” X 45.0”
	Above stowed volumes keep payload within bus payload deck footprint and ESPA/G/ Rideshare radial dimensions. Larger stowed volumes can be accommodated depending on launch vehicle configuration. Deployed volumes are CG and MOI dependent.		
PROPULSION	Multiple electric and chemical propulsion systems available		

Note: This data is for information only and subject to change. Please contact us for current design data.

SPACECRAFT SUBSYSTEMS

Our heritage includes on-orbit operations in VLEO, LEO, GEO, Lunar and deep space missions, including attitude control systems on the first interplanetary CubeSats. Building on this extensive flight heritage, as well as our high-performance component technology and precision pointing accuracy, our spacecraft subsystems deliver reliable capability for diverse mission needs. Our robust, scalable solutions are engineered to meet the fidelity and dependability required in today's space environment.

XB1 CUBESAT

XB1 CUBESAT AVIONICS

Since the launch of its first hardware in 2015, we have been proving that big discoveries start small. A decade later with more than 80 CubeSats launched, our industry-leading CubeSat technology is available to buy as a standalone component for your mission.

Our XB1 CubeSat avionics is a precision CubeSat bus solution in an integrated, compact (<2U) system. The XB1 is configured to support 6U, 12U and 16U CubeSats and includes guidance, navigation and control subsystems, electrical power subsystems, command and data handling and a thermal control system.

Included with the XB1 are three coarse sun sensors and a triple inhibit switch.



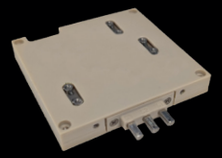



XB1 SUMMARY



XB1 P015



XB1 P050

MASS	2.8 kg	3.2 kg
VOLUME	1.5U	2U
LEO DOWNLINK	S-Band 2 Mbps with optional radio	
SUPPLY VOLTAGE	14.5 V – 34 V	
OAP POWER DRAW	11 W	
BATTERY	Li-ion 6.8 Ahr, expandable to 13.6 Ahr	
PAYLOAD POWER INTERFACES	3.3 V regulated, 5 V regulated, 12 V unregulated	
PAYLOAD DATA INTERFACES	UART (3.3V, LVDS, RS-422, RS-485), SpaceWire, 3.3V I/O, PPS	
PAYLOAD DATA STORAGE	4 GB	
C&DH ARCHITECTURE	Linux OS – Base	
ACS	3-axis reaction wheel control	
STAR TRACKERS	1 star tracker	
GPS	1 GPS receiver	
TIMING ACCURACY	20 ns with GPS lock, 5 µsec without GPS lock	
ATTITUDE KNOWLEDGE	6 arcsec (1-sigma) for 2 axes, 1 Tracker; 40 arcsec (1-sigma) for 3rd axis	
ATTITUDE CONTROL ACCURACY	17 arcsec (1-sigma) per axis	
MOMENTUM CAPABILITY	0.015 Nms per axis	0.050 Nms per axis
SURVIVAL TEMPERATURE RANGE	-30°C to +70°C	
OPERATIONAL TEMPERATURE RANGE	-20°C to +60°C	
DESIGN LIFETIME	5 years LEO, 2 years GEO/Lunar/Deep Space	
POSSIBLE ORBITAL REGIMES	LEO, GEO, Lunar, Cislunar, Deep Space	
TRL	9	

Note: This data is for information only and subject to change. Please contact us for current design data.

ATTITUDE DETERMINATION & CONTROL SYSTEMS

Nearly 250 of our attitude determination and control systems have launched, supporting numerous successful customer missions. Our solutions offer a reliable, high-performance design compatible with a wide range of satellite configurations, all from the most accurate stellar-based attitude solutions. A powerful processing core, coupled with low-noise reaction wheel assemblies and star trackers, enables a new generation of peak-performance, cost-efficient spacecraft.

XACT

No matter the mission, the XACT is up to the task. Our integrated attitude control solutions enable CubeSats to point with the absolute highest accuracy – much higher than that of previously available systems.

With three options, CubeSats of all sizes can be agile with the support of our reaction wheels and torque rods with customizable orientations, while still maintaining a minimal form factor.



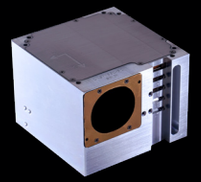





FLEXCORE

For a highly capable, cost-efficient attitude control system compatible with microsatellites, look no further than the FleXcore, featuring three-axis stellar attitude determination in a modular package. Add on specialized, optimized capabilities to minimize maneuver time and to maximize your spacecraft's usage. Built-in, flexible commanding allows for multiple pointing reference frames: Inertial, LVLH, Earth-fixed, Solar and even customized profiles. Precise three-axis control is provided by low jitter reaction wheels, torque rods and integrated control algorithms. Software is available to support simulation, system integration and customization of the ADCS functionality.

Now in its third generation, FleXcore 3.2 maintains the low-cost, high-performing standards that we're known for, while streamlining the customer experience and improving reliability.

FEATURES INCLUDE:

- XACT-based electronics and control software with external sensors and actuators
- Low-cost and high-performance attitude control solution
- Modular system fits multiple missions
- Supports multiple externally-mounted star trackers
- Scalable to a wide range of bus sizes
- Compatible with family of reaction wheels and torque rods
- Supports LEO, GEO and deep space missions

ADCS SUMMARY

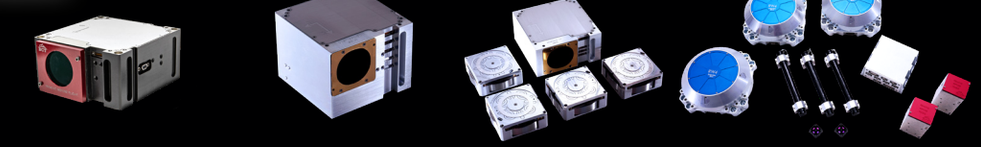

XACT-15 | XACT-50 | XACT-100 | FLEXCORE

POINTING ACCURACY	< 5 arcsec (1-sigma), 2 axes; < 14 arcsec, 3rd axis, 1 star tracker < 5 arcsec (1-sigma), all axes, 2 star trackers (option)			< 5 arcsec (1-sigma), per axis
POINTING STABILITY	< 1 arcsec over 1 sec (1-sigma), per axis			< 0.7 arcsec over 1 sec(1-sigma), per axis
MASS	0.89 kg	1.23 kg	0.52 kg + 1 kg (wheels)	Configuration Dependent
DIMENSIONS	10 x 10 x 5 cm (0.5U)	10 x 10 x 7.54 cm (0.75U)	10 x 10 x 5 cm (0.5U) (not incl. external components)	< 12.1 x 11.4 x 4.9 cm (not incl. external components)
SUPPLY VOLTAGE	12 V	12 V	12 V	28 V
INTERFACE	RS-422			
SLEW RATE	Up to 10 deg/sec (4 kg, 3U CubeSat)	Up to 10 deg/sec (14 kg, 6U CubeSat)	Up to 10 deg/sec (25 kg, 12U CubeSat)	Application Dependent
MOMENTUM STORAGE	15 mNms per axis	50 mNms per axis	Up to 4x 100 mNms	Up to 4x RWp500: 0.50 Nms RW1: 1 Nms RW2: 2 Nms RW4: 4 Nms RW8: 8 Nms RW16: 16 Nms

Note: This data is for information only and subject to change. Please contact us for current design data.



KEY ADVANTAGES:

- Precise attitude knowledge and control
- Complete ADCS in a micro package
- Low jitter reaction wheel design
- User-friendly software supports simulation, integration and customization
- Extensive heritage with nearly 250 systems launched

MISSION ENAB

FLEXBUS

The FleXbus mission enabler provides customers with a mission-ready, flight-proven kit of spacecraft components, including our industry-leading FleXcore guidance, navigation and control subsystem. These configurable components assemble quickly and operate together on orbit allowing customers to accelerate launch, build sovereign capability, focus on mission-specific engineering and gain hands-on integration experience.





FLEXBUS

POWER DISTRIBUTION	up to 3 kW
ENERGY STORAGE	40.8 Ah - 172.8 Ah
INPUT VOLTAGE	< 75 V
INTERFACES	LVDS, RS-422, Ethernet, SpaceWire
POINTING ACCURACY	< 5 arcsec (1-sigma), per axis *Typical. Mission specific pointing performance analysis available as option.
SWITCHED LOADS	Up to: 24x 12 Amp high current lines, 24x 6 Amp deployment lines, and 48x 3 Amp heater lines

PRODUCT OPTIONS

BASE:

- Spacecraft subsystems including an avionics computer and command & data handling system
- GNC control algorithms, sensors and actuators
- Electrical power system controller and batteries
- Payload and peripheral systems interfaces
- Flight software with payload and subsystem APIs
- Configuration of GNC settings for spacecraft
- User guides, handbooks, ICDs, harnessing guidelines

OPTIONS:

- Solar array drive assemblies, solar arrays and hinges
- Select radio and propulsion solutions
- Engineering services available upon request

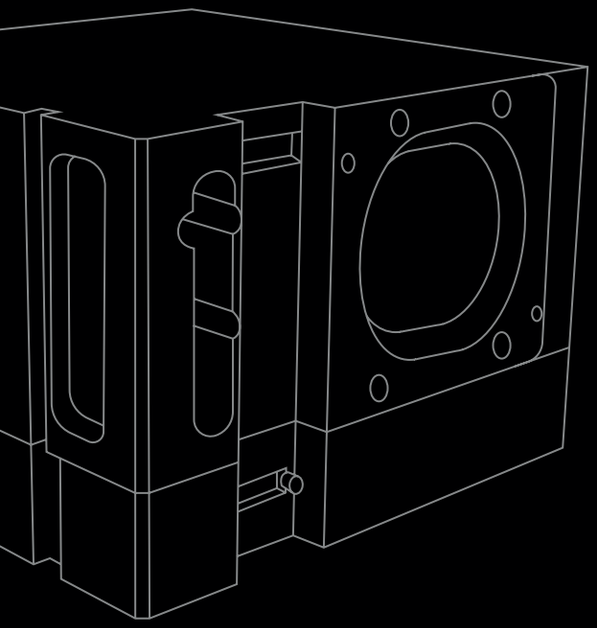

COMPONENTS

For more than a decade, our highly-precise, technically advanced solutions have disrupted the space market by demonstrating how lower-cost small satellites are an effective alternative for any number of different sized buses and technologies.

Our star-tracker-based attitude control systems have achieved the absolute highest possible pointing accuracy for our entire suite of spacecraft. These award-winning systems – as well as our power components – are available as a standalone purchase or as part of our system solutions. In fact, more than half of the American Institute of Aeronautics and Astronautics (AIAA) Small Satellite Missions of the Year award winners leveraged our hardware in the last decade.

STAR TRACKER

STAR TRACKERS

Our flight-proven, high-performing and reliable star trackers are compatible across spacecraft platforms and suited even for the most challenging and sensitive missions.

Industry-trusted nano star trackers are qualified beyond GEVS level environments, giving customers a low SWaP-C solution with stunning capabilities. The turnkey starlight-in, quaternion-out system integrates easily and is an ideal fit for standalone missions or constellations.





STANDARD NST

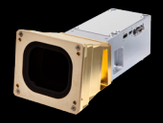

MID EXTENSION NST

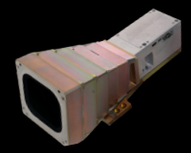

FULL EXTENSION NST

ATTITUDE KNOWLEDGE (1-SIGMA)	Gen3: 1 asec (cross boresight); 10 asec (about boresight) Gen2: 6 asec (cross boresight); 40 asec (about boresight)		
TEMPERATURE	-20°C to +50°C		
SOLUTION RATE	5 Hz		
SKY COVERAGE	> 99%		
LOST-IN-SPACE STAR IDENTIFICATION	< 4 sec (up to 1.5 deg/s)		
FIELD OF VIEW	10 × 12 deg		
SUPPLY VOLTAGE	5 V or 28 V		
PEAK POWER CONSUMPTION	< 1.5 W (5 V) or < 3.5 W (28 V)		
MASS	0.35 kg	0.45 kg	0.85 kg
DIMENSIONS	10 × 5.5 × 5 cm	17 × 8.5 × 7 cm	25 × 10 × 10 cm
BAFFLE SUN EXCLUSION ANGLE	45 deg	22 deg	17.5 deg

Note: This data is for information only and subject to change. Please contact us for current design data.

FEATURES INCLUDE:

- More than 1,000 star trackers manufactured with nearly 500 launched
- Low SWaP-C
- Tracks stars down to 7.5 magnitude
- On-board star catalog features more than 20,000 stars
- Lost-in-space star identification
- Shock tested to 523g
- EMI/EMC characterization report available
- User friendly RS-422 or RS-485 interface

REACTION WH

REACTION WHEELS

Our ultra-low disturbance reaction wheels feature deliver long-life performance and vibration isolation features. With nearly 4,000 wheels manufactured and hundreds on-orbit, our reaction wheels have supported missions ranging from very low Earth orbit to cislunar and interplanetary journeys.

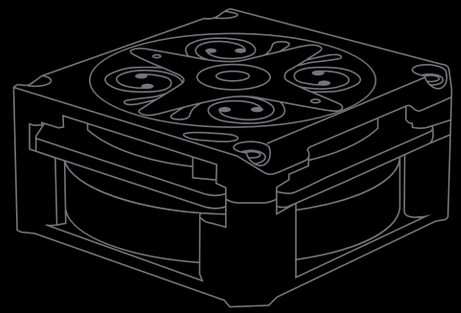



RWP015



RWP050



RWP100



RWP500

	RWP015	RWP050	RWP100	RWP500
MAX MOMENTUM	0.015 Nms	0.050 Nms	0.100 Nms	0.50 Nms
MAX TORQUE	0.004 Nm	0.007 Nm	0.007 Nm	0.025 Nm
MASS	0.13 kg	0.24 kg	0.33 kg	0.86 kg
DIMENSIONS	42 x 42 x 19 mm	58 x 58 x 25 mm	70 x 70 x 25 mm	112 x 124 x 38 mm
SUPPLY VOLTAGE	10 - 14 VDC	10 - 14 VDC	10 - 14 VDC	22 - 34 VDC
POWER @ MAX MOMENTUM	< 1 W	< 1 W	< 1 W	< 6 W

Note: This data is for information only and subject to change. Please contact us for current design data.

DRIVE CONTROL ELECTRONICS (DCE)

Our drive control electronics are sensor and actuator suites that include the necessary components to operate our reaction wheels and optional torque rods. The DCE is typically used with the RWp015, RWp050 and RWp100 reaction wheels, providing robust, configurable and high-performance software.

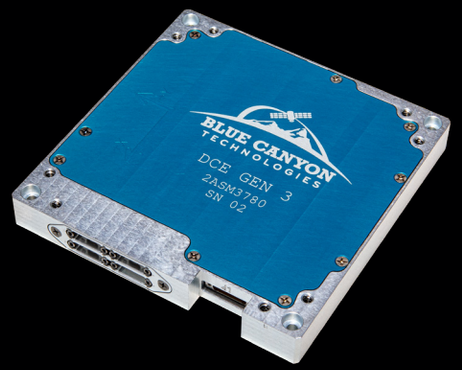

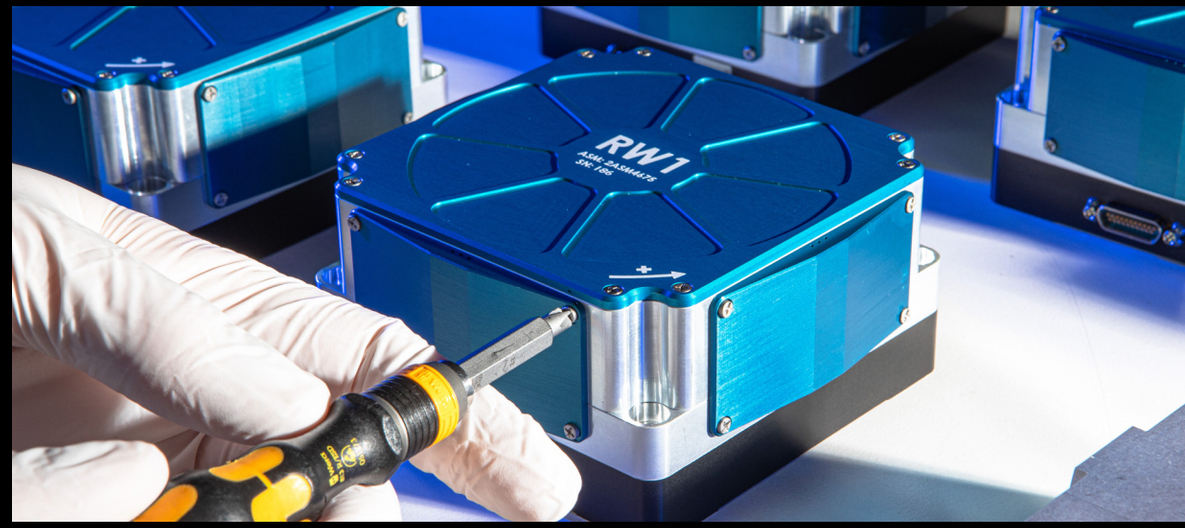

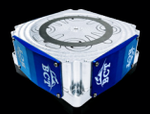

RW1

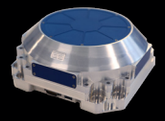

RW2 | RW2-HT
(TRL2)



RW4 | RW4-HT



RW8 | RW8-HT

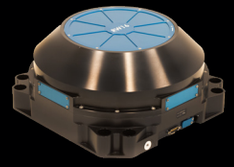

RW16 | RW16-HT

	RW1	RW2 | RW2-HT (TRL2)	RW4 | RW4-HT	RW8 | RW8-HT	RW16 | RW16-HT
MAX MOMENTUM	1.0 Nms	2.0 Nms | 1.2 Nms	4.0 Nms | 2.5 Nms	8.0 Nms | 5.0 Nms	16.0 Nms | 10.0 Nms
MAX TORQUE	0.06 Nm	0.12 Nm | 0.25 Nm	0.25 Nm | 0.50 Nm	0.25 Nm | 0.50 Nm	0.25 Nm | 0.50 Nm
MASS	1.1 kg	2.5 kg	3.2 kg	4.4 kg	7.4 kg
DIMENSIONS	112 x 112 x 55 mm	150 x 150 x 65 mm	175 x 175 x 72 mm	193 x 193 x 84 mm	242 x 242 x 120 mm
SUPPLY VOLTAGE	22 – 34 VDC	22 – 34 VDC	22 – 34 VDC	22 – 34 VDC	22 – 34 VDC
POWER @ MAX MOMENTUM	< 14 W	< 14 W	< 10 W	< 10 W	< 30 W
PROTOCOL	RS-422				

Note: This data is for information only and subject to change. Please contact us for current design data.

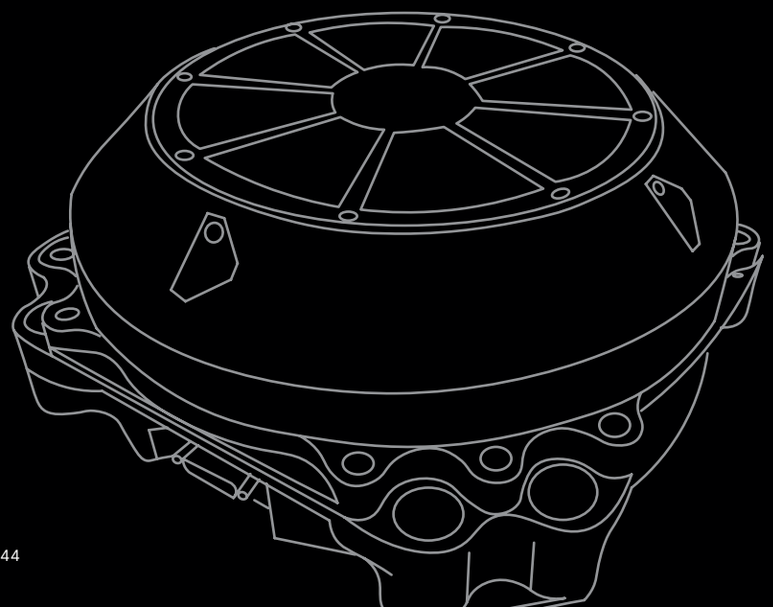



CONTROL MON

CONTROL MOMENT GYROSCOPES



Our range of control moment gyroscopes (CMGs) are built to provide your spacecraft with the exquisite agility necessary to navigate the most challenging missions.

Offering improved torque performance at a lower power consumption than reaction wheels, our CMGs provide low jitter and long-life performance for your mission.

DRIVE CONTROL ELECTRONICS

Flexible interface options include discrete CMG torque and momentum control to fully integrate spacecraft attitude control systems using up to four CMGs.



CMG-8



CMG-12

	CMG-8	CMG-12
MOMENTUM	8 Nms	12 Nms
TORQUE	8 Nm	12 Nm
GIMBAL AXIS ANGULAR RANGE	Unlimited	Unlimited
MASS	< 13 kg	< 18 kg
VOLUME	22 x 22 x 30 cm	34 x 43 x 38 cm
VOLTAGE	22-36 VDC	22-36 VDC
POWER, FULL MOMENTUM	25 W	20 W
POWER, MANEUVER	30 W	35 W
COMMUNICATION	RS-422	
GIMBAL MANEUVERS	> 2 million	
DESIGN LIFE	> 10 years	

Note: This data is for information only and subject to change. Please contact us for current design data.

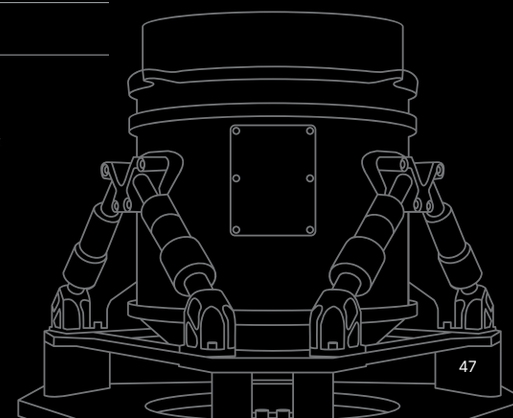

POWER SYS

POWER SYSTEM CAPABILITIES

Ensure the reliability and functionality of onboard subsystems with our flight-proven power system capabilities. Our solar arrays, solar array drive assemblies and batteries offer outstanding power efficiency, flexibility and fault tolerance.

SOLAR ARRAYS

Solar panels generate power with high-efficiency solar cells. We offer configurations ranging from simple body-mounted wings to multi-panel and multi-wing deployed arrays with the option to gimbal up to two arrays. Our standard arrays include 30 percent efficient cells, carbon fiber substrates and magnetic-dipole mitigation.

Release mechanisms and solar array drive assemblies (SADAs) are available for solar array deployment and optimum sun-pointing operations.

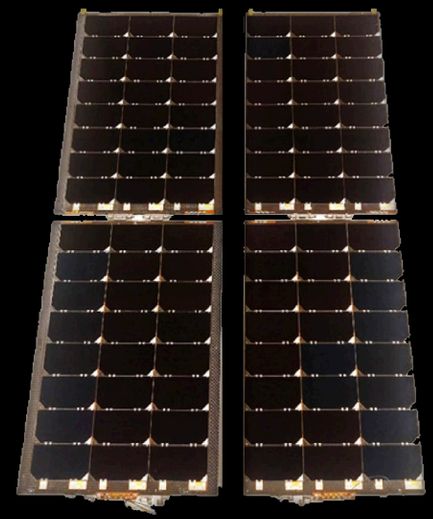

6U-V Double Panel Solar Array
48 W - 96 W

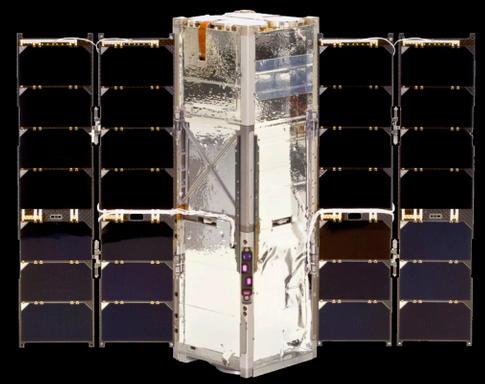

3U Double Panel Solar Array
27 W - 34 W



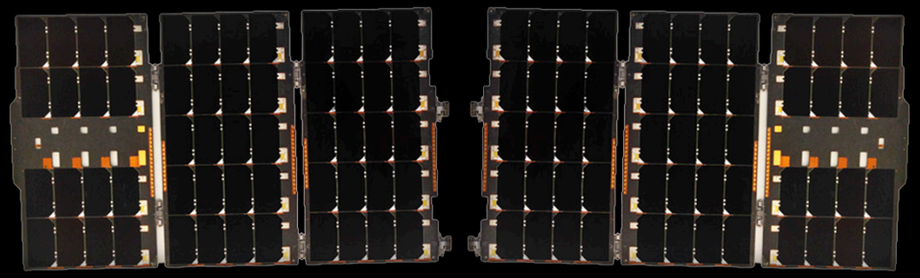

6U-12U-H Triple Panel Solar Array
54 W - 118 W

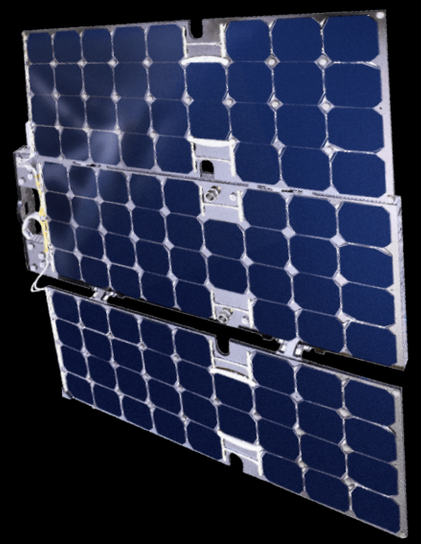

ESPA-Class Venus Solar Array
222 W - 444 W

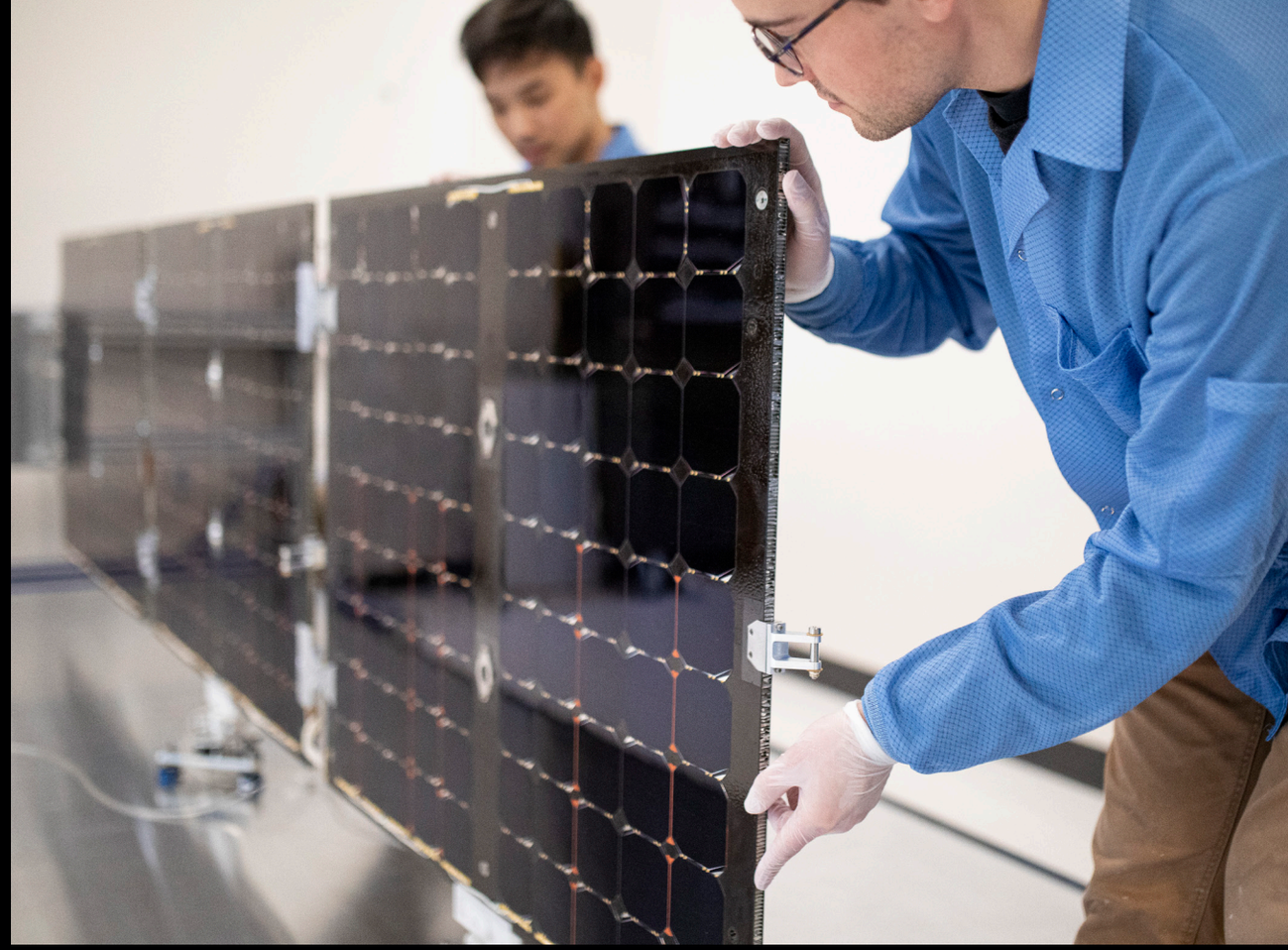

NOMINAL PARAMETERS* *Parameters at 60 C/BOL	3U	6U/12U	VENUS-100 MICROSATELLITE	SATURN-200 MINISATELLITE
SOLAR ARRAY POWER	27 - 34 W	48 - 118 W	222 - 444 W	600 - 1200 W
ARRAY VOLTAGE, VMP	15 VDC	17.5 or 35 VDC	37 VDC	39 VDC

Note: This data is for information only and subject to change. Please contact us for current design data.

FEATURES:

- Industry-leading 30 percent efficient solar cells
- Carbon fiber structures
- TRL-9 flight heritage

OPTIONS:

- Linear and rotary release mechanism options for CubeSats
- Frangibolt® release mechanisms for minisatellites

SOLAR ARRAY

SOLAR ARRAY DRIVE ASSEMBLIES

Maximize your payload operation time by freeing up the solar array pointing constraints using our effective and cost-efficient solar array drive assemblies (SADAs). Our SADAs have increased capabilities across our suite of spacecraft. From standard to custom solutions, we have the pointing mechanisms to enable even the most complex of smallsat missions.





SADA-3



SADA-3HP

MASS	1.5 kg	1.73 kg
VOLUME	Ø11.1 x 12.5 cm	Ø11.1 x 15.0 cm
NOMINAL OUTPUT TORQUE	10 Nm	10 Nm
RANGE OF MOTION	+/- 175°	+/- 175°
OUTPUT STEP SIZE	0.015°	0.015°
MAXIMUM RATE	10°/s	10°/s
MOTOR TYPE	Two-Phase Stepper	Two-Phase Stepper
POWER CONSUMPTION (MAX TORQUE)	12 W	12 W
DESIGN LIFE	5 Years	5 Years
NUMBER OF POWER CIRCUITS	15 Circuits	25 Circuits
CURRENT RATING PER POWER CIRCUIT	1.4 A	1.6 A
SOLAR ARRAY COMPATIBILITY	Venus-100 Microsatellite Array, Saturn-200 Minisatellite Array, Custom Array	

Note: This data is for information only and subject to change. Please contact us for current design data.

BATTERIES

BATTERIES

Reliable power is essential to spacecraft performance. Our flight-proven battery solutions combine high energy density, intelligent power management and robust protection to meet the demands of today's small satellite missions.

Our high-capacity batteries include integrated heaters to optimize operation at low temperature and feature under voltage protection, over current protection and cell balancing.



CONFIGURATION	1P8S	2P8S
NAMEPLATE CAPACITY	3.4 Ah	6.8 Ah
ENERGY	99 Wh	198 Wh
MASS	< 685 g	< 1210 g
FOOTPRINT	1.8" x 4.2"	1.8" x 7.2"
HEIGHT	3.5"	3.5"
NOMINAL VOLTAGE	28 V	28 V
VOLTAGE RANGE	24V – 33.6 V	24V – 33.6 V
MAX CONTINUOUS CURRENT	3.4 A	6.8 A

Note: This data is for information only and subject to change. Please contact us for current design data.



FEATURES INCLUDE:

- Under voltage protection
- Over current protection
- Cell balancing

INTEGRATION & TEST

Build confidence in your mission with our advanced testing facilities. As part of our standard suite of environmental testing, we perform vibration, thermal vacuum testing and high-G shock testing across all three axes to verify structural integrity and functional performance of spaceflight hardware under extreme transient loads.

Further testing capabilities include star simulators, wheel balance equipment, solar array deployment support hardware, thermal cycle chambers and use of a Helmholtz cage. To deliver the most reliable method of testing and operating for your mission, we use the same software to test our spacecraft as we do to operate on-orbit. This cohesion ensures the interfaces and ground databases are the same through the lifecycle of the mission.

Contact us to learn more about how we can support your environmental testing needs.

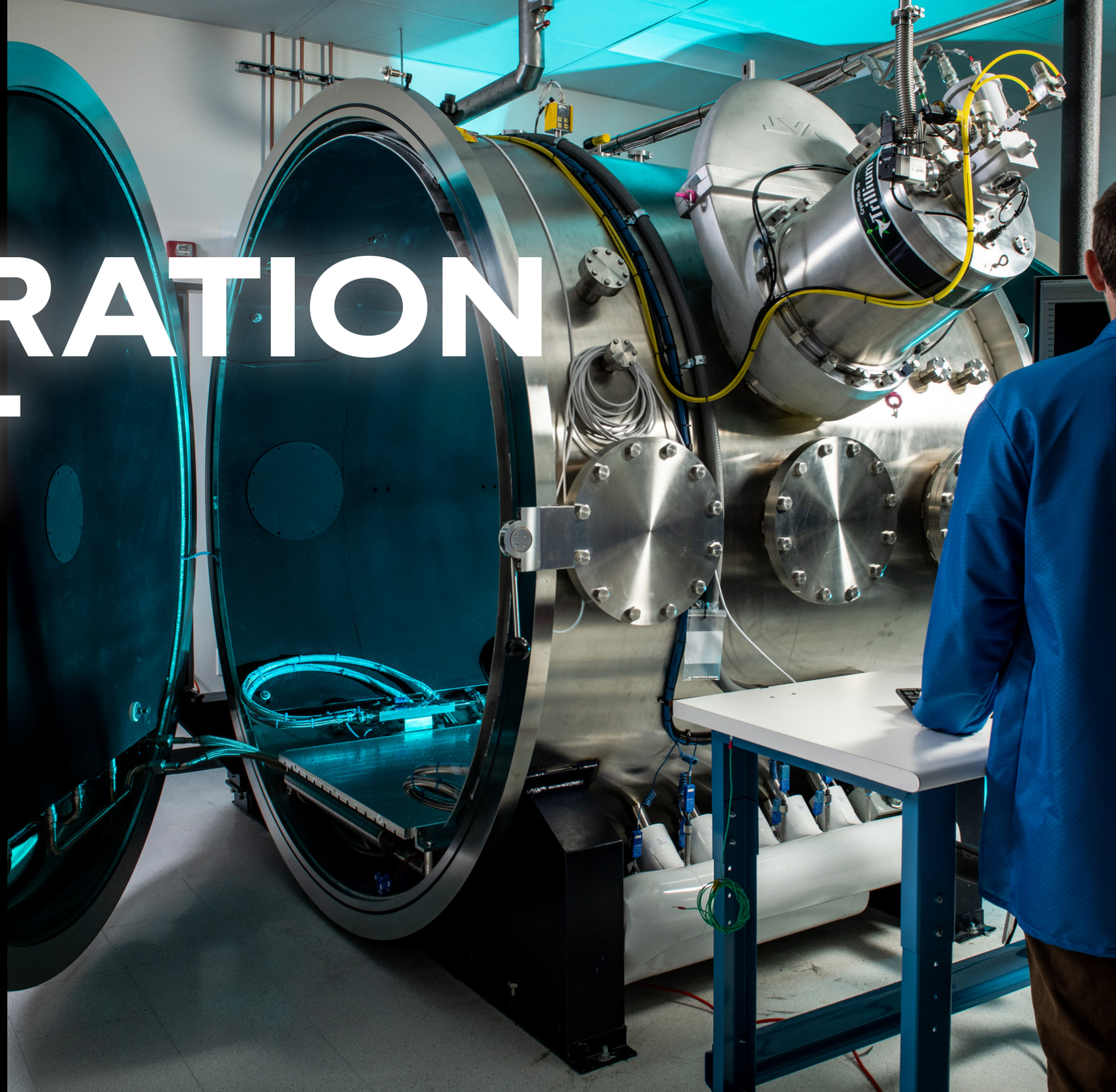

INTEGRATION &

SIMULATION PRODUCTS



To prepare for your mission, we offer two spacecraft simulation products to serve a variety of mission to hardware-in-the-loop needs – the GN&C Software Simulator and the Real-time Dynamics Processor (RDP).

The GN&C Software Simulator is a desktop executable that meshes the GN&C flight code and high-fidelity simulations into a tool that runs up to 150x faster than real-time, to support rapid mission planning and software behavior testing.

The Real-time Dynamics Processor is both a real-time spacecraft simulator and telemetry ground test interface to our avionics systems. This combination of features enables test-like-you-fly capability at both the unit and spacecraft level. The RDP features an Ethernet port for communication with a test computer and a connection to the unit under test for command and telemetry interfacing.

The common simulation present in both products allows the user to initialize the simulated spacecraft to mission-specific conditions to create orbit-like scenarios. This customization offers users insight into the performance and behavior of the spacecraft under various expected and test cases that may be experienced on-orbit.



RDP

TEST/GSE INTERFACE	Ethernet and USB
FLIGHT INTERFACE	RS-422 or RS-485, LVDS for Simulations

Note: This data is for information only and subject to change. Please contact us for current design data.

MODELING CAPABILITIES:

- High-fidelity spacecraft dynamics
- Orbital dynamics and celestial bodies
- Actuator and sensor outputs
- Various fault injection cases

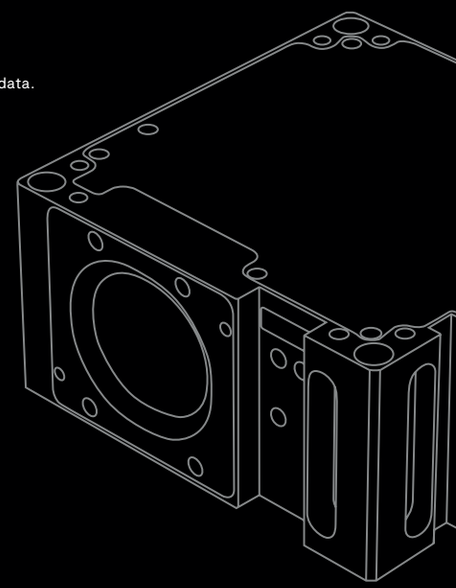

ENVIRONMENTAL TEST CAPABILITIES

We now offer our environmental testing services externally to help build confidence in your mission.

Our spacecraft bus platforms, subsystems and components are flight proven, high-performing and reliable. Part of this successful heritage is a result of our dedication to testing like we fly.

We perform thermal vacuum testing and thermal cycling to simulate space environments, including vacuum conditions and extreme temperature swings. In addition, our vibe testing assesses impact from mechanical stresses and vibrations, helping to identify structural weaknesses and ensure durability. We also offer high-G shock testing across all three axes to verify structural integrity and hardware performance under extreme transient loads.

Our Colorado facilities include:

- 12 thermal vacuum chambers
- 25 thermal chambers
- Two vibration tables
- High-G shock testing equipment

TVAC TESTING	EXTRA LARGE	LARGE	MEDIUM	SMALL
PRESSURE RANGE	1E-5 Torr using Cryo Pump	1E-5 Torr using Cryo Pump	1E-5 Torr using Cryo Pump	1E-4 Torr using Turbo Pump
TEMPERATURE	-190°C to +120°C	-65°C to +65°C	-65°C to +65°C	-65°C to +65°C
PLATEN SIZE	36"x64" 1/4-20 thread 2.5"x2.5" grid pattern	32"x38" 1/4-20 thread 2.5"x2.5" grid pattern	47.5"x23.5" 1/4-20 thread 2.5"x2.5" grid pattern	21"x21" 1/4-20 thread 1"x1" grid pattern
SHROUD	80" Diameter 60" Long	67" Diameter 40" Long	46"W x 25.5"H x 36" L	24"W x 24"H x 24" L
FEEDTHROUGHS	ASA1000 plates, multiple DSUB connectors, RF connections available on 2.75" CF flanges	ASA800 plates, multiple DSUB connectors, RF connections available on 2.75" CF flanges	4.5" & 4.625"CF plates, 25DSUB, 50DSUB & 72DSUB connectors, RF connections available on 2.75" CF flanges	25DSUB & 50DSUB connectors, RF connections

THERMAL CHAMBERS	WALK-IN	LARGE	MEDIUM	SMALL
RAMP RATES	50°C/min cooling 7°C/min heating	1.5°C/min cooling 4°C/min heating	15°C/min cooling 15°C/min heating	3°C/min cooling 5°C/min heating
TEMPERATURE	-70°C to +185°C	-73°C to +175°C	-73°C to +180°C	-73°C to +180°C
INTERIOR	54"W x 81"H x 60"L	48"W x 48"H x 48"L	19.6"W x 23.6"H x 15"L, 30"W x 30"H x 30"L or 40"W x 32"H x 36.5"L	16"W x 12"H x 14"L or 19.6"W x 12"H x 11"L
ATMOSPHERE	Nitrogen purged	Nitrogen purged	Nitrogen purged	Nitrogen purged
FEEDTHROUGHS	6" ports	4" - 6" ports	4" ports	2" ports

VIBRATION TABLE	LARGE	MEDIUM
FORCE RATING	18,000 lbf sine 18,000 lbf random	8,000 lbf sine 8,000 lbf random
AUTOMATIC LOAD SUPPORT	2,500 lbs	1,360 lbs
MAX FREE AMPLITUDE	85 g	95 g
STROKE	3"	2"
MAX VELOCITY	80 in/sec	75 in/sec
MOUNTING	36" x 36" with 3/8"-24 threads on a 4" grid pattern	28" x 28" with 3/8"-24 threads on a 4" grid pattern

SHOCK TESTING	BCT 9000
MOUNTING PLATE	44" x 20" with 3/8" - 16 threads on 4" x 4" grid pattern
ADAPTER PLATE	12" x 12" with 2" x 2" grid pattern

Note: This data is for information only and subject to change. Please contact us for current design data.

MISSION OPERATIONS

Our vertical integration spans from individual spacecraft components and subsystems to complete spacecraft solutions and mission operations services. With direct access to the engineering teams that design and build our spacecraft, we provide unmatched insight into spacecraft subsystem and flight software behavior – enabling efficient, reliable operations and effective anomaly mitigation and resolution.

With decades of heritage and more than 325,000 supported contacts, our mission operations team delivers proven solutions that simplify execution and ensure dependable on-orbit performance.

SECURE AND SCALABLE PLATFORM

Our proprietary, cloud-based mission operations platform provides a secure, NIST-compliant environment for operating a diverse range of spacecraft and mission profiles. Developed and maintained in-house, it is designed to rapidly onboard new missions through standardized, configurable processes within a scalable architecture supporting numerous ground network interfaces.

AUTONOMOUS OPERATIONS

- Event-driven automation manages the full contact lifecycle from ground resource scheduling and pre-pass setup through command execution, state-of-health monitoring, and post-pass data delivery, enabling engineers to focus on higher-value mission activities.
- Mission-configurable frameworks autonomously execute routine command objectives using standardized, state-based logic that scales efficiently while maintaining flexibility for mission-specific requirements.
- Tiered anomaly detection and response automation identifies off-nominal conditions in real time and executes flight-proven recovery actions and escalation paths for operator intervention when needed.

MONITORING AND AWARENESS

- Integrated monitoring tools provide real-time and historical visibility into spacecraft telemetry and system performance, enabling tactical and long-term trending analysis across missions.
- Customers have secure, direct access to mission data through standardized APIs and visualization tools that connect to the same trusted telemetry sources used by our own operations engineers.
- Configurable alerting mechanisms enhance situational awareness for both engineers and customers, ensuring timely visibility into key events and system performance.



COMPREHENSIVE PRE-LAUNCH AND LEOP SUPPORT

- Dedicated pre-launch operations support ensures all operational requirements are met through customer collaborative CONOPS development, mission integration, system interface testing and LEOP simulations.
- Our team of highly experienced engineers execute against a streamlined, flight proven LEOP commissioning strategy specifically designed to achieve operational readiness quickly and safely, often within hours of launch.

GROWING OPERATIONAL HERITAGE

Our team is currently operating more than 25 spacecraft, supporting more than 350 contacts per day. Backed by a decade of experience and refined practices, we are fully prepared to support new missions, leveraging our insights and proven strategies to drive mission success.

2550 Crescent Drive
Lafayette, CO 80026

INFO@MDASPACEUSA.COM

WWW.MDASPACEUSA.COM

2027