

SUPPLIER QUALITY REQUIREMENTS

Document Number	QP-003
Issue/Revision	J
Release Date	See PLM System
Document Owner	Quality
Approval Groups	SC, Quality

Deployment is required for any revision change of this document. Deployment instructions: MARCOM to update https://www.bluecanyontech.com/suppliers/ and send an email to purchasing@bluecanyontech.com alerting them that a new revision of this document has been released.



SUPPLIER QUALITY REQUIREMENTS

Revision Log

Revision	Affected Section(s)	Description of Changes	Change Date
A-H	See PLM	See PLM	See PLM
I	3.0, Q1, Q2, Q3, Q4, Q5, Q6, Q8, Q9, Q10, Q14, Added Q21, Q22	Added Quality Record retention period. Q1 – removed references to OCM no change to req't Q2- Removed reference to composites, sheet metal etc. for clarification. Added (Mill Cert) to deliverable for clarity no change to req't Q3- Minor rewording for clarity, no change to req't Q4- added statement requiring copy of "all inspections and tests" for clarity Q5- Removed AOI and inspection req't and added Tantalum bake out req't Q6- removed x-ray references and added req't to provide a statement of 100% passing results for AOI in EIDP to Deliverables Q8- Removed "Special Processes" from title and changed Deliverables to be just the Q3 C of C Q9- Major change to clarify all items required in the As-Built BOM Q10-revised b.) section to clarify requirements for oval'd dimensions Q14- Requirement for Electrical testing of PWAs removed. Flying probe in Q20 replaces this requirement Q16- Removed reference to GEIA-STD-005-2 Q17- Changed deliverable to be just Q3 C of C Q18- Removed "Deliverable" Adde Q21 and Q22	8/1/2023
J	2.0, 4.0	Section 2.0 – Added WVR-X and WA-1 Section 4.0 - Modified verbiage on Q1 for clear indication on documentation and packaging. Added thread clarifications to Q10 Added Q23: Staking of PWA's, Added Q24: Reference to the SOW	8/20/2025



SUPPLIER QUALITY REQUIREMENTS

1. Table of Contents

1.0 Purpose 4
2.0 Terms and Definitions 4
3.0 Standard Quality Requirements 4
4.0 BCT PO Specified Quality Notes 5
Appendix A 14

1.0 Purpose

This document lists the Quality Notes and expected deliverables. Standard Quality Requirements apply to all Purchase Orders without exception. BCT Purchase Order Specific Quality Notes are listed on the Purchase Order and are contractually binding and by accepting the purchase order, it is assumed the supplier is agreeing to the requirements of this document. Order of precedence is the Purchase order w/Qnotes, Engineering Drawing, process standards (IPC, NASA, etc.), and finally, the manufacturer's data sheets.

Suppliers SHALL notify Blue Canyon Technologies immediately if they are unable to comply with the Standard AND BCT PO Specified Quality Note(s).

This document is expected to be provided to suppliers in its entirety.

2.0 Terms and Definitions

- PO – Purchase Order
- Quality Note – Additional requirements levied by BCT in addition to any drawing, SOW, or other requirements derived from or indicated on the PO, RFQ, or RFI.
- RFI – Request for Information
- RFQ – Request for Quote
- OCM – Original Component Manufacturer
- WVR-X – When a q-note is waived it is shown as WVR-X where X is the q-note number that is being waived.
- WA-1 – No Q-notes required.

3.0 Standard Quality Requirements

The following notes apply to **ALL** Purchase Orders from Blue Canyon Technologies. These may not be removed without explicit approval from BCT Quality Assurance.

1: Supplier SHALL ensure the right of access by the organization, their customer, and regulatory authorities to the applicable areas of facilities and to applicable documented information, at any level of the supply chain.

2: Supplier SHALL notify the BCT Buyer, within 5 business days of discovery of ANY non-conformance of BCT product discovered during manufacturing or after delivery to BCT.

3: Supplier SHALL notify the BCT Buyer, within 5 business days of notification of ANY change of certification (e.g., Nadcap, AS9100, ISO9001, ISO17025, etc.) status (suspended, protest, appeal, revoked, etc.)

4: Retained records shall be destroyed at the expiration of the retention period. The retention period for all quality records is 7 years.

4.0 BCT PO Specified Quality Notes

These Quality Notes are called out on the Purchase Order line and apply to the part number referenced on that line. ONLY the Q#(s) called out on that line apply to that line.

Q1: Full Traceability

Requirements: The seller SHALL provide traceability back to the original manufacturer's lot and/or date code for each lot of delivered parts to be clearly indicated on the documentation and part packaging sent to BCT.

Deliverables: Documentation proving chain of custody to original manufacturer. MFG lot and/or date code for each lot of delivered parts to be clearly indicated on the documentation and part packaging sent to BCT.
**ESD sensitive parts shall be packaged appropriately (Sealed ESD protective bags, etc.)

Q2: Raw Material Certifications Required

Requirements: The seller shall include with each shipment the manufacturer's raw material test report (i.e., mill test report) which states that the lot of material used in the production of the purchased hardware has been tested, inspected, and found to be in compliance with the applicable material specifications. The test report shall contain the following information:

- Specifications including revision numbers or letters to which the material has been tested and/or inspected.
- Heat and lot number(s)
- Chemical and physical test data
- When the material specification requires quantitative limits for chemical, mechanical, or physical properties, the test report shall contain the actual test and/or inspection values obtained.

For all metallic materials, use 0DOC5161 *Metals Procurement Standards* to ensure the material meets one of the procurement standard options for each alloy and temper.

Deliverables: Manufacturer certification (Mill cert) with MFG heat/lot number for all raw materials used in the manufacture of delivered parts to be provided with each shipment sent to BCT.

Q3: Certificate of Conformance/Certificate of Analysis Required

Requirements: Supplier SHALL deliver a certificate of conformance attesting to the compliance of the deliverable including BCT part number, revision, name of supplier's authorized signer, and BCT PO number. The certification statement may be printed on the packing slip or separate provided the certification is traceable to the purchase order. The signature is strongly desired, but BCT will accept the supplier's format.
Note: This may also be referred to as a Certificate of Analysis in certain industries.
Any deviations from these requirements must be approved by BCT prior to shipment.

Deliverables: A certification statement SHALL be included on the deliverable documentation and must include the BCT part number, lot number/date code (if applicable), revision, name of supplier's authorized signer, and BCT PO number.

Q4: Inspection and Electrical Test Report (PWB Only)

Requirements: The supplier shall provide a copy of any and all inspections and tests performed to verify that the PWB is in compliance with all applicable specifications (including BCT document EP-108 if applicable). Seller is required to electrically test the Printed Wiring Board to verify the schematic and electrical connections. This may be accomplished using capacitance testing, continuity testing, clamshell testing, flying probe, bed of nails, etc. Supplier may select an appropriate method but lack or insufficiency of testing does NOT alleviate the supplier of compliance to the requirements.

Deliverables: Supplier SHALL provide an inspection report and all test reports that indicates the test(s) performed, inspection results, test results and the part number with serial number/batch number of the PWB(s).

Q5: Process in accordance with 0PR0187

Requirements: BCT document 0PR0187 and Q5 define processing requirements for Printed Wiring Assemblies (PWA) soldering, assembly, and general manufacturing provisions, required by BCT Purchase Orders.

Deliverables:

a. **Tantalum Preconditioning process documentation** (if Tantalum capacitors are used). Seller shall provide documentation showing time, temperature, and date that the capacitors were baked out and the date they were installed onto the PWA. A copy of the traveler is acceptable as long as it provides all of the required data listed above.
b. BGA Specific Requirements:

i. **Reballing repor**t shall include process identification and materials certification if Sn/Pb reballing was required.
ii. **X-Ray inspection** shall be performed for all Ball Grid Arrays (BGA) and thermal attachments, with results included in the inspection report.

c. PWAs shall be inspected to IPC-A-610, Class 3 prior to delivery.
i. **X-Ray inspection** shall be performed on ALL EEE parts where solder workmanship cannot be inspected visually.
ii. **X-Ray inspection** shall be performed on ALL devices that have a thermal pad or for which solder connections cannot be visually inspected. This includes but is not limited to the following package types: BGA/CGA/LGA, QFN, LCC, SON, Thermally Enhanced TSSOP.
iii. Thermal pad solder coverage shall be >50%.

d. **Photographs of each side of each board** shall be provided in electronic format (email or CD-ROM). Resolution and quality of supplied files shall be sufficient to identify parts, reference designators on silkscreen and part numbers if visible.

e. **All non-conformances shall be reported to BCT formally (written or email) prior to proceeding**

Q6: PWA Assembly Verification: Automated Optical Inspection

Requirements: Supplier shall perform Automated Optical Inspection on the PWA. AOI should confirm polarities, component placement, missing components, solder acceptability, and IC orientation. Supplier shall provide AOI results to BCT.

Deliverables: For each PWA S/N, the supplier SHALL supply the AOI results in an electronic format to BCT. If AOI testing passes 100%, supplier shall include a document stating "No defects found during AOI testing" in the EIDP folder.

Q7: DPAS Rated Order. Process in accordance with "15 CFR 700"

Requirements: Rated orders take precedence over all unrated orders as necessary to meet required delivery dates. Among rated orders, DX rated orders take precedence over DO rated orders. Persons receiving rated orders must give them preferential treatment as required by this part. All rated orders must be scheduled to the extent possible to ensure delivery by the required delivery date. See 15 CFR 700 for additional requirements. Check PO for actual rating (e.g., DX, DX-A4, DO, etc.)

Deliverables: None

Q8: Sub-tier Supplier Flow down of requirements

Requirements: The supplier must have processes in place to assure full compliance with all quality Purchase Order (PO) notes and requirements applicable to the PO. When products or

services applicable to this PO are procured by the supplier from sub-tier suppliers, the supplier must flow the Q-note requirements on the PO and all other requirements, as necessary, to ensure full compliance is achieved.

Deliverables: A Certificate of conformance from supplier (Q3 above satisfies this requirement)

Q9: As-Built Report and Certifications Required.

Requirements: The seller SHALL provide a report, in an Excel spreadsheet that lists:

- Component Find Number from the BCT BOM
- The component part number on the BCT BOM
- The ACTUAL mfr's part number that was used by the supplier
- The ACTUAL lot number and/or date code of each component
- the ACTUAL quantity installed on the PWA
- All reference designators for each component installed

The As-Built report SHALL clearly identify any parts that were NOT installed.

Deliverables: An electronic report that shows all the ACTUAL parts used in the manufacturing of the PWA including, mfr's part number, date/lot code, qty installed, ref. designators, and BOM item number

Item	Part Number	REV	Description	QTY	Reference Designator	Date Code	Lot code	Customer supplied?
1	15WB4824-02	B	PWB, PDU, FLIGHT	1	WB1	Jan-22		
100	NAS620C2	A	CRES WASHER, #2, .016THK	3	W1, W2, W3	2236	427279	
101	NAS620C4L	A	CRES WASHER, #4, .016THK	6	W4, W5, W6, W7, W8, W9	2241	IT2G200R01	
102	NAS1352N02-6	A	A286 SHCS, 2-56 X .375L	3	S1, S2, S3	2233		Consigned
103	NAS1352N04-5	A	A286 SHCS, 4-40 X .313L	6	S4, S5, S6, S7, S8, S9	Sep-22	8920066	
150	RM452-276-332-9522-S12	A	Conn., Rect., Plug, 276 Pos., Pin, BRT, Key 22	1	P1	Dec-22	8290135	
151	280-029S5H78MENB-186M	A	Conn., Sub., Plug, 78 Pos., Socket, BRT	2	J1, J3		TNFR3738062N5	
152	280-028P5H78MEGNB-186M	A	Conn., Sub., Recept., 78 Pos., Pin, BRT	1	J2		TNFR3738062N6	

Q10: Inspection Report Required

Requirements: The seller shall provide an inspection report, preferably in Excel or similar electronic spreadsheet format, that details the results for an inspection as follows

a) A complete inspection report of one piece from each manufacturing lot delivered, to include all features dimensioned with a specified tolerance (not a block tolerance*) and all non-global GDT callouts (not the block GDT callout), and
b) If a dimension is annotated on the drawing with an oval (i.e., critical dimension), that dimension must be inspected on every piece in the lot and those results documented on the inspection report for every piece in the lot.
c) Thread class requirements that are not specified on the drawing shall be class 2B for thread call outs less than 6-32 and class 3B for thread call outs 6-32 and larger.

d) Threaded inserts – Unless otherwise specified on the drawing, all thread call outs with the inserts to be installed by BCT reference, shall be considered STI type which is specific to the helicoil brand.
e) See example drawing below for reference.

*Block tolerances still apply; they are not required to be recorded on the inspection report. These results must include all the information listed on AS9102 Form 3. The supplier may also utilize the form in Appendix A of this document (use as many copies as necessary).

Deliverables: An electronic (preferred) report that shows all the inspection results of one piece from each manufacturing lot

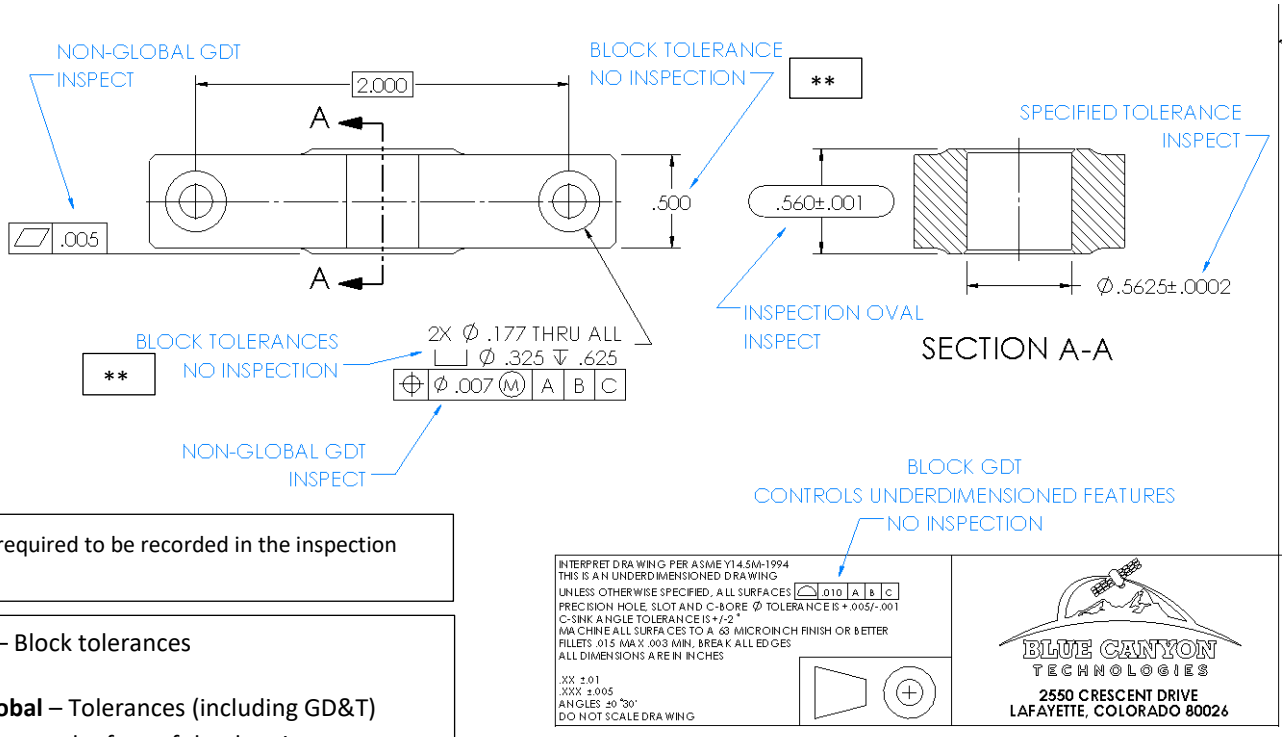

** Not required to be recorded in the inspection report

Global – Block tolerances

Non-Global – Tolerances (including GD&T) called out on the face of the drawing

Figure 1: EXAMPLE DRAWING

Q11: Non-Franchised/Non-Authorized Distribution Procurement

Requirements: See SOW 88DOC0025.

Deliverables: Appendix A checklist, inspection, and data report per section 3.16, and Approved and BCT Signed Appendix B form per section 3.17 of SOW 88DOC0025.

Q12: Requirements for Cable and Harness Assemblies

Requirements: This note details the delivery requirements for Cable and Harness Assemblies inclusive of soldering, wrapping, crimping, assembly, and general manufacturing provisions, required by BCT Purchase Orders.

Deliverables:

a. **A detailed inspection report**, including dimensions, weight(s), labeling, and identification of non-conformances and dispositions, shall be included with the delivered assembly, or provided electronic format (email or CD-ROM). Supplier format acceptable.

b. **Photographs of the harness and each connector showing the conditions of the pins/sockets.** Pictures shall be provided in electronic format (email or CD-ROM). Resolution and quality of supplied files shall be sufficient to identify parts, reference designators and part numbers if visible.

c. **A test report for each cable indicating continuity and isolation of the entire harness corresponding to the schematic on the engineering drawing.** This is typically accomplished using a Cirris™ or similar tester and produces a report that indicates point to point connection resistance or isolation.

d. **All non-conformances shall be reported to BCT formally (written or email) prior to proceeding.**

Q13: Requirements Limited Life and Temperature Sensitive Materials

Requirements: Items with a limited shelf life shall arrive at Blue Canyon Technologies with a minimum of 50% shelf life remaining. Material with special storage requirements per manufacturer's specifications (e.g., frozen, refrigeration, etc.) shall arrive at Blue Canyon Technologies properly packaged and maintaining those storage conditions (e.g., insulated containers, packed with dry ice, etc.) Blue Canyon Technologies reserves the right to return any shipment that arrives exceeding the temperature parameters. Materials that may be stored at room temperature does not need special packaging.

Deliverables: Material properly packaged, maintaining manufacturer's required storage temperature, and expiration date(s) clearly indicating 50% shelf life remaining upon arrival.

Q14: DELETED

Q15: AS9102 First Article Inspection Report Required

Requirements: The seller SHALL provide a report, preferably in Excel or similar spreadsheet electronic format, that details the results for a complete AS9102 First Article inspection of one piece of the manufacturing lot delivered. This report SHALL utilize the latest AS9102 forms. The supplier MUST also provide material certifications and traceability for all subassemblies, materials, processes, and items contained in the deliverable (e.g., metal, Helicoils, pins, inserts, adhesives, plating, etc.)

Deliverables: An electronic AS9102 FAI of one piece of the manufacturing lot and applicable material and process certifications.

Q16: Lead Re-Tinning / Dipping

Requirements: For electrical, electronic, and electromechanical (EEE) hardware, all interconnect finishes containing tin must be alloyed with a minimum of 3% lead (Pb). Pre-tinning is not required when components are installed using 63%Sn37%Pb solder paste with flux meeting the J-STD-001 Space Addendum requirements (for BGA's, see Q5c. above). All gold-plated leads MUST be tinned prior to installation.

Deliverables: A Certificate of conformance from supplier (Q3 above)

Q17: Prohibited Materials

Requirements: Supplier shall provide material that does not contain any of the following:

- Cadmium (>1% composition when alloyed with copper; all other Cadmium alloys and cadmium plating is prohibited)
- Mercury
- Pure Zinc (>97% by composition)
- Pure Tin (>97% by composition)
- Brominated Polyimide

Deliverables: Statement on supplier's certificate of conformance (Q3, C of C) or a certificate stating no prohibited materials were used. The certificate must be signed and dated.

Q18: Calibration

Requirement: The supplier must have a calibration system in place that meets ISO 17025 or the ability to show uncertainty summary in accordance with Z540.3 standards. If a minimum test

accuracy ratio of 4:1 cannot be achieved, Blue Canyon must be notified prior to work starting. Perform all inspections and tests using calibrated equipment.

Deliverables: A Certificate of conformance from supplier (Q3 above)

Q19: Electrostatic Discharge (ESD) Control Program

For all ESD sensitive Electrical, Electronic, and Electromechanical (EEE) devices, the Subcontractor shall properly handle, package, and identify in accordance with ANSI/ESD S20.20 [current rev] including all requirements of Section 8.1-8.5. All personnel handling BCT ESD Sensitive Hardware shall be trained in ESD safe handling practices and receive refresher ESD training at least once every 2 years. All BCT ESD sensitive equipment is assumed to have a sensitivity greater than or equal to 100 volts.

Deliverables: A statement on the CofC showing compliance with the current revision of ANSI/ESD S20.20.

Q20: Flying probe shall be performed on all PWA assemblies

- Initial test profile shall have prior approval from BCT engineering. Approval is only required for the first run of each PWA part number and revision.
- Test profile shall include all parts to be measured/probed and maximum current/voltage that will be applied.
- Part measurement tolerances shall be per the part data sheet, or +/-1%, whichever is greater.
- Test profile shall apply <0.8V and <0.5mA, unless otherwise approved by BCT engineering.

<u>Testing is to be performed on the following parts when available:</u>

- Chip components, including resistors, capacitors, diodes, transistors.
    - If required, measure capacitors in parallel to get a total capacitance readout.
- PTH relays and connectors

<u>Testing is not to be performed on the following parts:</u>

- ICs, BGAs, FPGAs, FETs

Deliverables: The following documentation shall be provided to BCT:

- **Test report (readout) serialized for each board that undergoes assembly with pass/fail criteria for parts tested.**
- **Readout of which components were tested, and which ones were not.**

Q21: Test/Inspection Reports

A copy of all tests, inspections, or measurements taken during the production of product to verify that requirements have been met shall be included with each shipment of hardware.

Deliverables: Copies of test reports and inspections used to verify hardware and performance requirements have been met.

Q22: Special Processes

Requirements: A special process is one in which the output cannot be verified by subsequent monitoring or measurement (ex.: Heat treating, Induction Hardening, Plating, Wire EDM). The supplier shall validate and control these special processes in accordance with AS9100 section 8.5.1.2.

Deliverables: A certificate of conformance from the supplier of the special process stating the specification (ASTM, Mil-Std etc.) that the special process was required to conform to was met and that the product is in compliance.

Q23: Staking Requirements – PWA's

Staking Application to be performed by PWA Supplier. Refer to drawing notes in the ASD for specific details.

Q24: Statement Of Work (SOW)

For quality and traceability requirements applicable to this hardware, refer to the Statement of Work (SOW).

SUPPLIER QUALITY REQUIREMENTS

QP-003
Rev J

Appendix A

BLUE CANYON TECHNOLOGIES	**Inspection Report**	**Page _ of _**

Contact:	Supplier:	
Part Number:	Part Description:	
Material Lot#:	Finish:	PO:

Feature Characteristics					**Inspection / Test Results**				
Balloon	QTY	Feature	Requirement	Units	Upper limit	Lower Limit	Results	Tool / ID	Notes